MELGES 24 Owners Manual

Major Components 3
Specifications 3
IMPROTANT WARNINGS – DON'TS 4
IMPROTANT WARNINGS – DO'S 5
Rigging your Melges 24 Following Delivery 6
Rigging the Mainsheet Traveller 11
Rigging the Boom Vang System 12
Rigging the Mainsheet 13
Deck Hardware Layout 14
Traveller and Mast Bulkhead Controls 14
Stanchions and Deck Pulleys 14
Stanchions and Deck Pulleys 15
Melges 24 Rigging List 16
Rigging Runs 17
Preparing your Melges 24 for the water 19
Launching Your Melges 24 23
Rigging the Tack Line 25
Rigging the Spinnaker Sheets 26
Rigging the Jib Sheet 27
Recovering your Melges 24 28
Spares 29
Distributor 29
Customer Options 30
Melges 24 Sails 30
Tuning Guide 31
1. Mainsail Trim Settings 31
2. Jib Trim Settings 32
3. Spinnaker Trim Chart 32
4. Crew Weight Positions 33
Spreader Assembly 34
Internal Rigging of Boom Main Outhaul 35
Appendix 1: Devoti Sailing - Melges 24 Parts List – Used on your boat 36

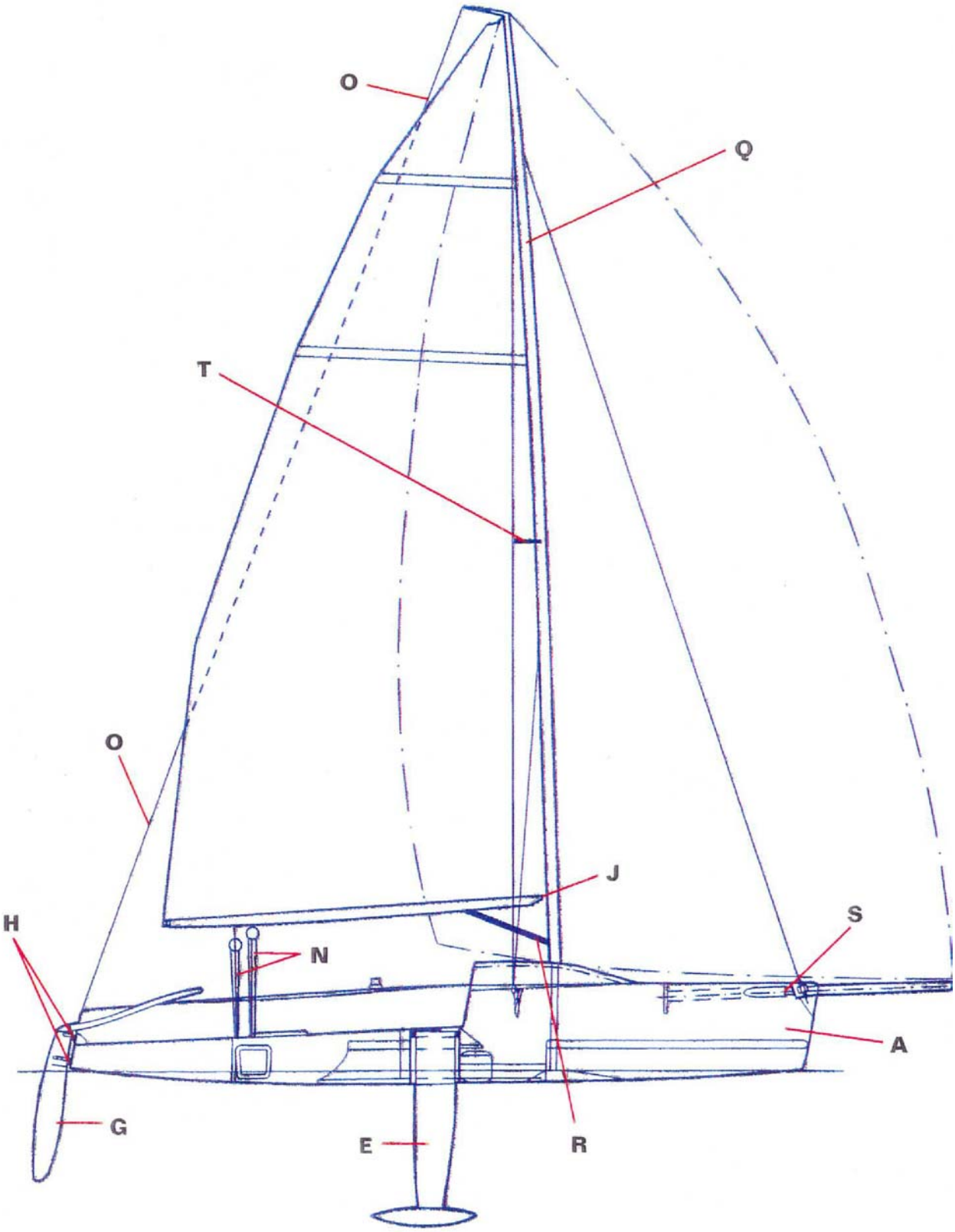
O
Q
T
O
J
H
S
N
A
G
E
R

Major Components

Specifications

LOA	24.0 ft
LWL	22.0 ft
BMAX	8.2 ft
Draft	5.0 ft
Displacement	1750 pds
I	27.85 ft
J	7.95 ft
P	28.90 ft
E	12.45 ft
Sail Area	
Main	254.0 sq. ft
Genoa	126.0 sq. ft
Asymmetrical Spinnaker	666.0 sq.ft

Hull and Deck
A. Closed cell PVC foam core.
B. Thirteen feet long cockpit. Styled after International fifty foot race boats.
C. Two moulded wedge shaped foot pushes along entire length of cockpit sole
D. Cockpit lazarette locker for cool box and engine storage.
E. Retractable keel for easy launching either by ramp or hoist.
F. Single point keel and hull lifting point for elimination of side/side and fore/aft anti-tip lines for hoist launching.

CARBON COMPONENTS
G. Carbon fibre outboard mounted foil shaped rudder.
H. Streamlined stainless steel pin ties and gudgeons.
I. Carbon fibre shaped tiller for maximum turning radius. J. Custom cast stainless steel gooseneck.
K. Stainless steel stem fitting with supplementary stainless attachment point for Harken Roller Furler.

DECK HARDWARE
L. Harken main traveller for easy sheeting.
M. Schaefer with single dinghy block or adjusted car.
N. 6:1 mechanical advantage main sheeting.
O. Permanent backstay controls lead to deck between skipper and 2nd crew.
P. One-Design life-lines. stanchions and stern pulpits.

SPARS. STANDING AND RUNNING RIGGING
Q. Carbon fibre. wedge tapered. AwlGrlp painted mast. R. Solid black< anodised boom vang.
S. Custom bow sprit seal.
T. Spreader.

Note: Specifications subject to change without notice

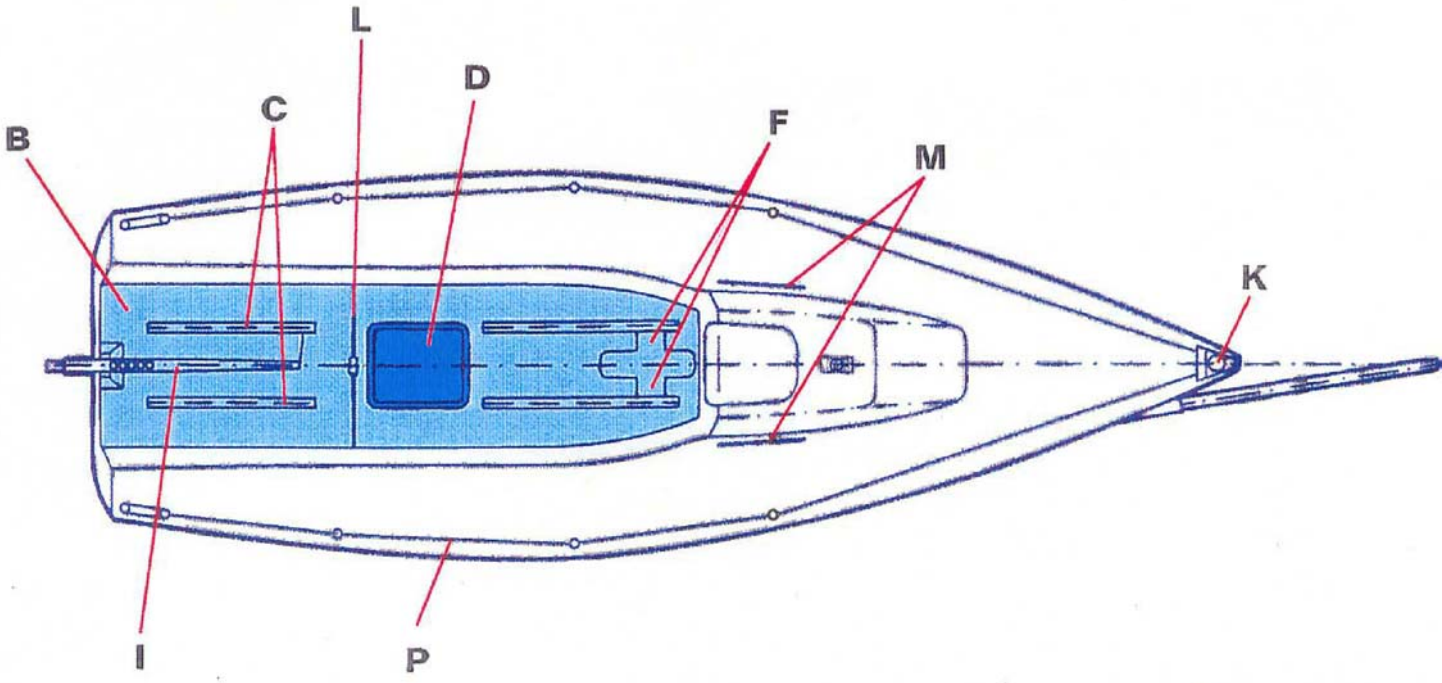

IMPROTANT WARNINGS – DON'TS

The Melges 24 has been designed to offer speed and safety in equal measure.

But to ensure your safety and the continued good condition of your boat please take special note of the following points.

DON'TS

- Don't untie the boat from its trailer until it is in the water for launching.
- Don't attempt to erect the mast alone. It takes 2 people.
- Don't ever mount or dismount the engine without first attaching a line to it when you are afloat.
- Don't ever let the keel drop into place, always winch it down.
- Don't ever let go the Halyards, as they will rise to the top of the mast if not held or tied off.
- Don't clean the boat with acid or solvents, always use Glass Fibre Cleaner.

IMPROTANT WARNINGS – DO'S

DO'S

- Make sure the boat is secure before towing.
- Remember to turn off the fuel and breather on the engine before stowing it.
- Lock the Highfield Lever with the pin as soon as you have raised the Headsail.
- Always launch and recover your boat with the keel raised and the rudder removed.
- Furl the jib clockwise to avoid sail damage.
- Make sure the nuts and bolts on all the bottle screws are tight.
- Always hose salt water off boat and trailer after use and let them dry.
- Grease trailer bearings and all winches regularly.
- Tape over all sharp edges to avoid sail damage.
- Keep rudder, tiller and hatches well protected in Custom Bags when not in use, to prevent chipping and scratching.

Rigging your Melges 24 Following Delivery

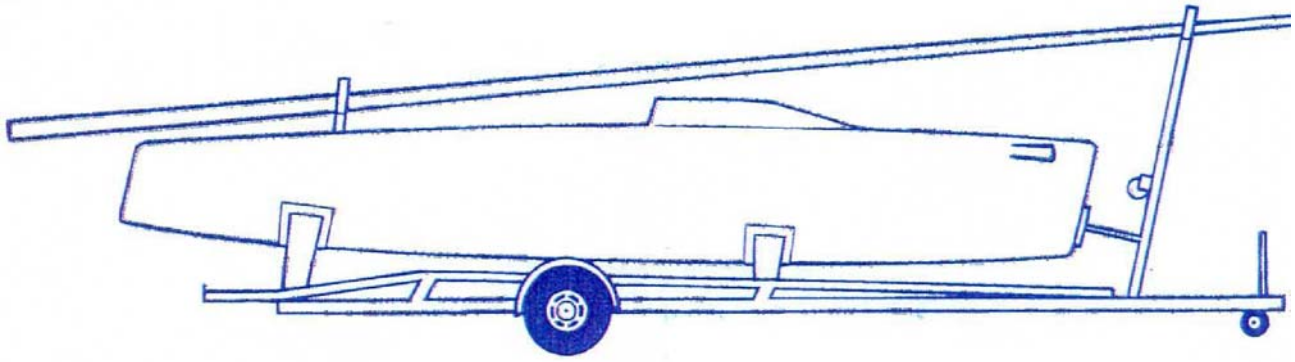

1. ATTACH THE BACKSTAY BATON
by removing the 2 Philips screws from the mast crane, putting the batten in place and then screwing it on, taking care not to over tighten it (fig A).

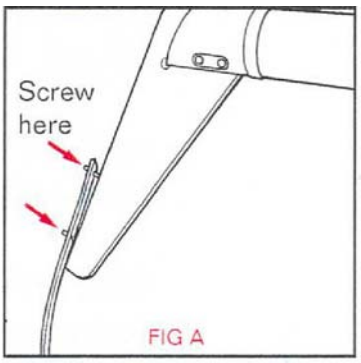

FIG A

2.UNCOIL THE BACKSTAY and run it out alongside the mast, before threading the flat eye at one end through the ring at the other end of the batten, sliding the eye into the slot in the crane and securing it 'using the pin and ring provided (fig B)

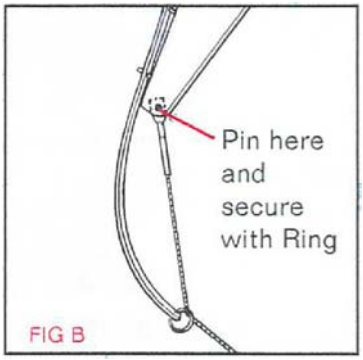

FIG B

3. ATTACH THE FORKED END OF THE BACKSTAY to the Harken Wire Block on the backstay purchase wire (fig C).

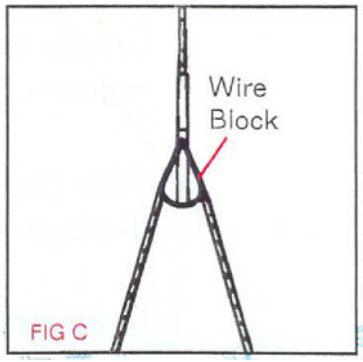

FIG C

4. RIG THE BACKST AY PURCHASE SYSTEM by first shackling the backstay purchase wire to the tang on the transom, then attach the wire block to the other tang with the Double Bullet trailing forward (fig D).

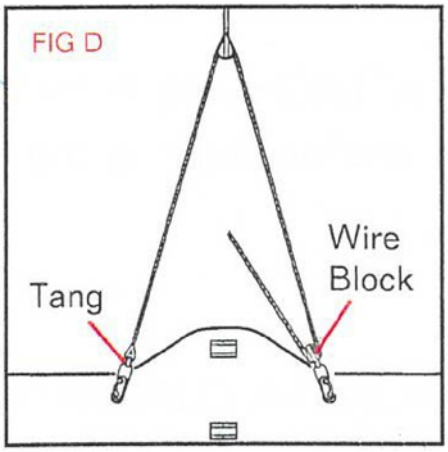

5. RIG THE BACKSTAY LINE, (as illustrated in the diagram below) by first running it through the front Cam Cleat CA), from the top down, through the Bullet Block (B) beneath, then through the Cheeks (C) mounted on deck in front of the track, then through one sheave of the Double Bullet block (D), back to the fixed Bullet Swivel (E) hanging from the track, back through the second sheave of the Double Bullet Block (D), through the fixed cheek (F) in front of the track, through the Bullet Block (G) and then through the Cam Cleat (H) above. Finally, tie a figure 8 in each end of the line.

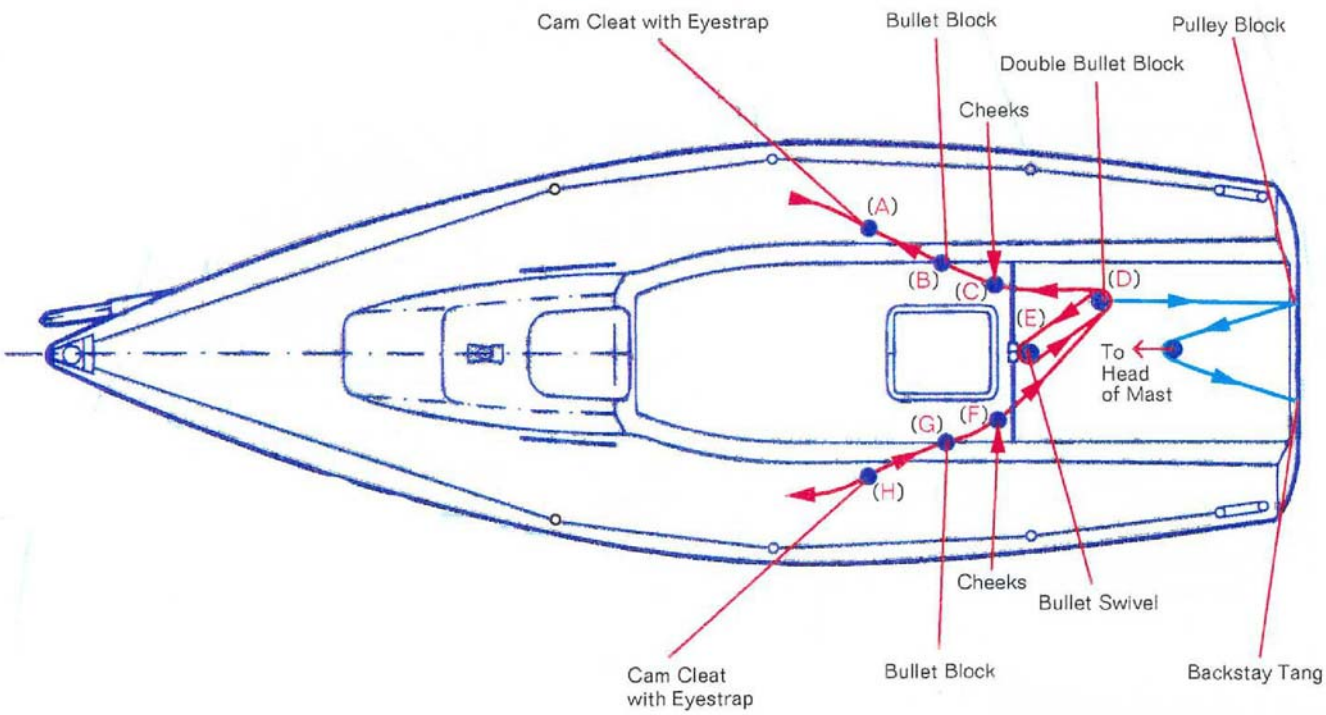

Running the Line for the Furling Drum

1. ATTACH THE FURLING, DRUM, with the pin and locking ring (fig F).

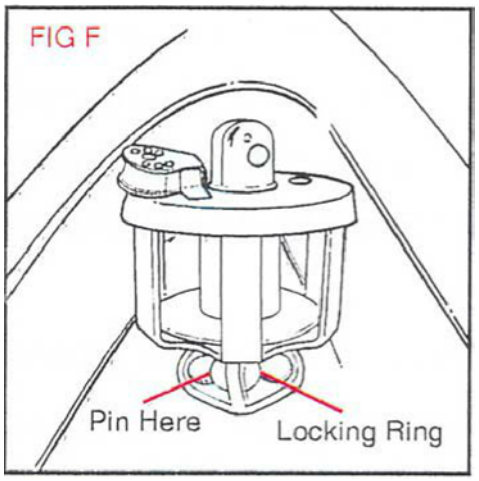

2. RUN THE FURLING LINE through the slot in the port side of the cockpit bulkhead, through the Cam Cleat, all the way through the hull, then through the hole into the furling drum well.

3. RUN THE LINE "THROUGH THE HOLE IN THE TOP OFTHE FURUNG DRUM, and tie it: 10 a figure B at the end (fig G).

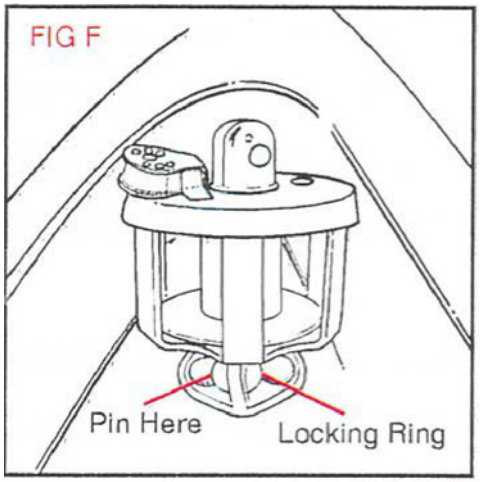

4. WIND THE LINE ON ANTI CLOCKWISE (fig H), so that when the sail is furled. it will wind on CLOCKWISE. This is important if sail damage is to be prevented.

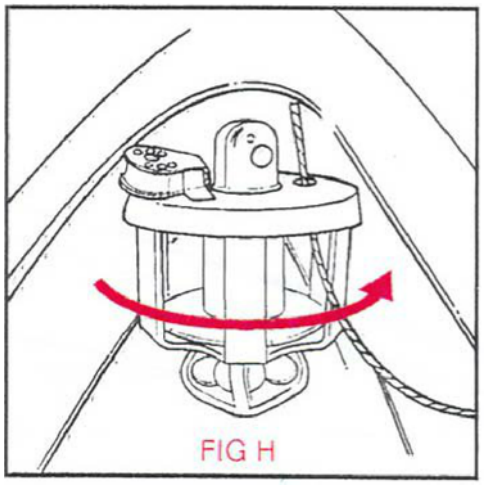

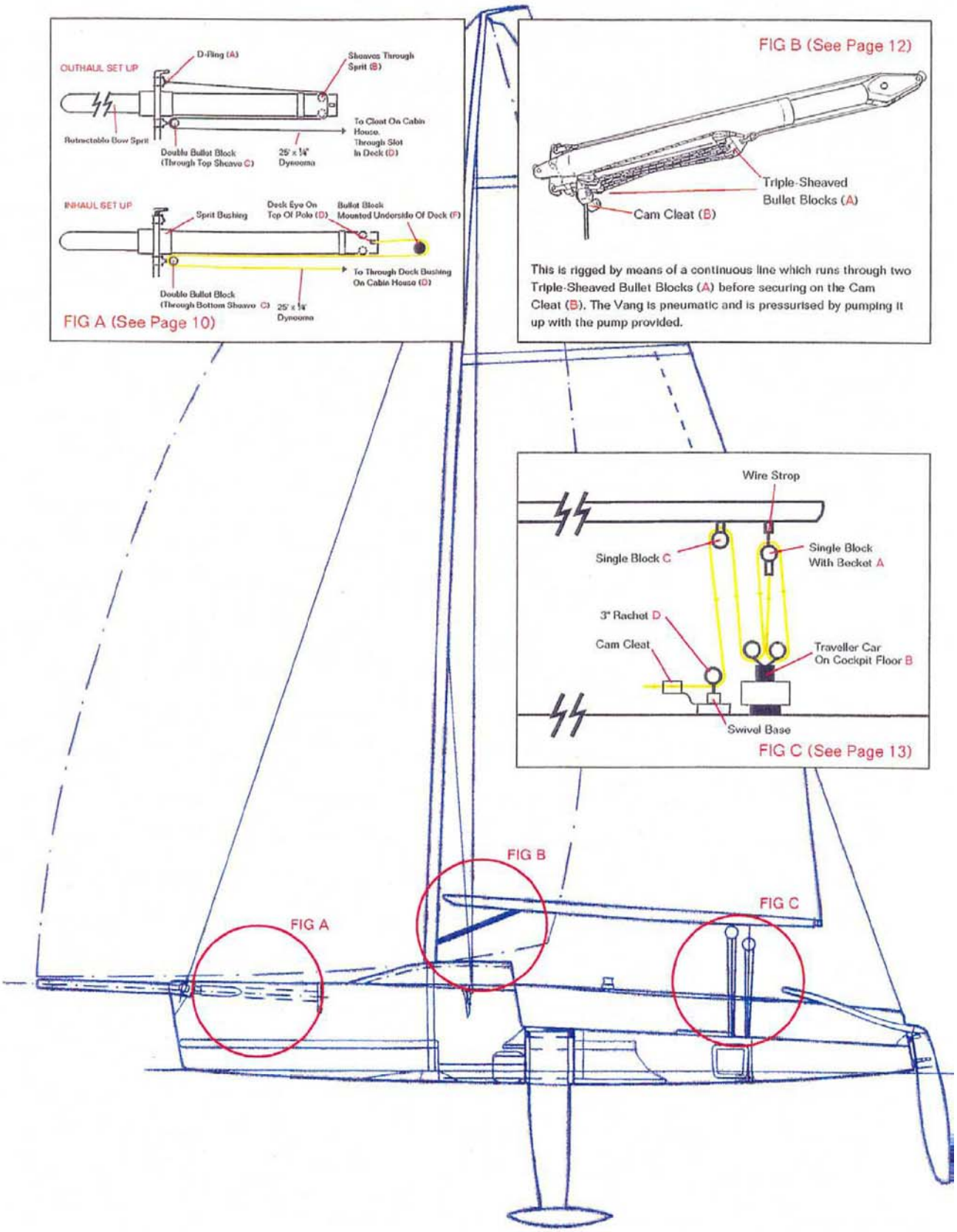
OUTHAUL SET UP
D-Ring (A)
Sheaves Through Sprit (B)
Retractable Bow Sprit
To Cleat On Cabin House. Through Slot In Deck (D)
Double Bullet Block (Through Top Sheave C)
25' x 1/4" Dyneema
INHAUL SET UP
Sprit Bushing
Deck Eye On Top Of Pole (D)
Bullet Block Mounted Underside Of Deck (F)
To Through Deck Bushing On Cabin House (D)
Double Bullet Block (Through Bottom Sheave C)
25' x 1/4" Dyneema
FIG A (See Page 10)
FIG B (See Page 12)
Triple-Sheaved Bullet Blocks (A)
Cam Cleat (B)
This is rigged by means of a continuous line which runs through two Triple-Sheaved Bullet Blocks (A) before securing on the Cam Cleat (B). The Vang is pneumatic and is pressurised by pumping it up with the pump provided.
Wire Strop
Single Block C
Single Block With Becket A
3" Rachet D
Cam Cleat
Traveller Car On Cockpit Floor B
Swivel Base
FIG C (See Page 13)
FIG A
FIG B
FIG C

Rigging the Bow Sprit

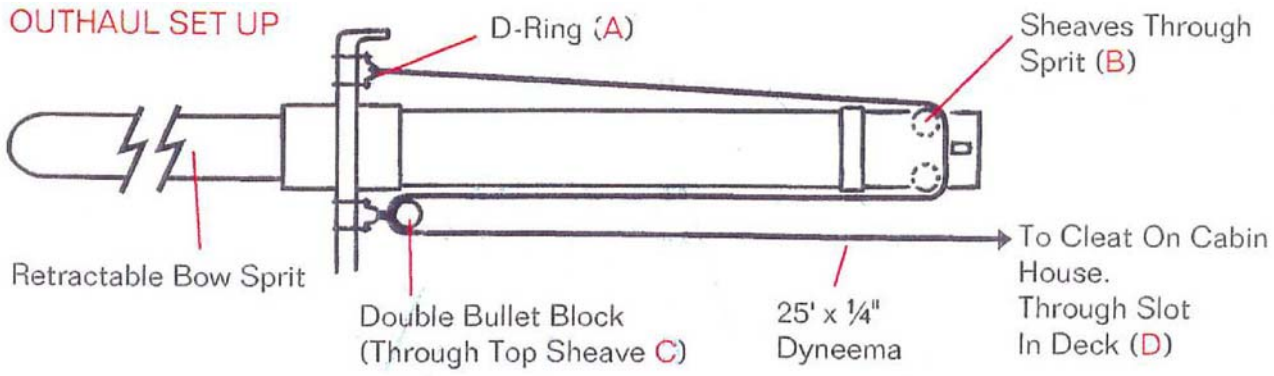

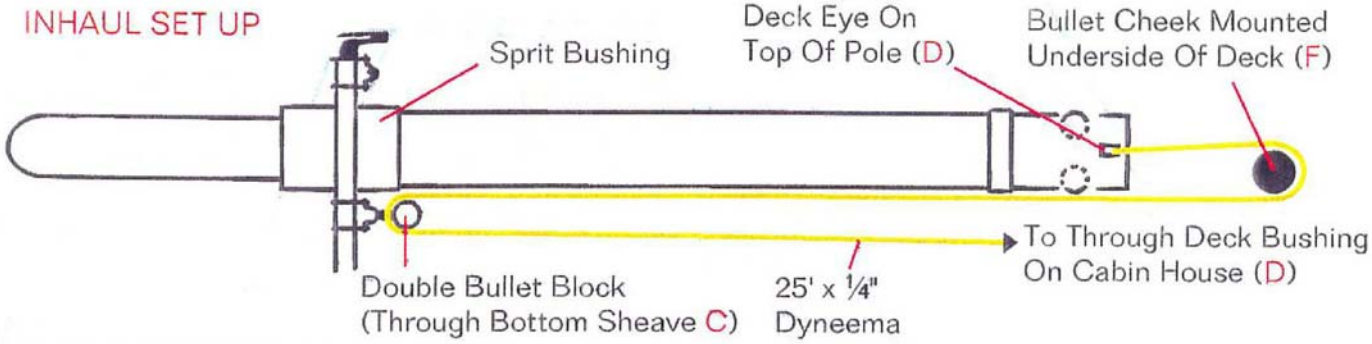

1. TIE OFF ONE END OF THE OUTHAUL LINE to the D-ring on the starboard bulkhead CA), run it to the back of the pole, through both sheaves in the pole (B), forward to the double Bullet Block on the bulkhead (C), through the top sheave **from** the side nearest the pole, then through the Cam Cleat on the Cabin House and into the cockpit (D).

2. TIE OFF ONE END OF THE INHAUL LINE to the D-ring(E), run it back to the Block (F) on the underside of the deck, forward to the bottom sheave on the Block (C). and back out through the bottom hole in the Cabin House (D).

Rigging the Mainsheet Traveller

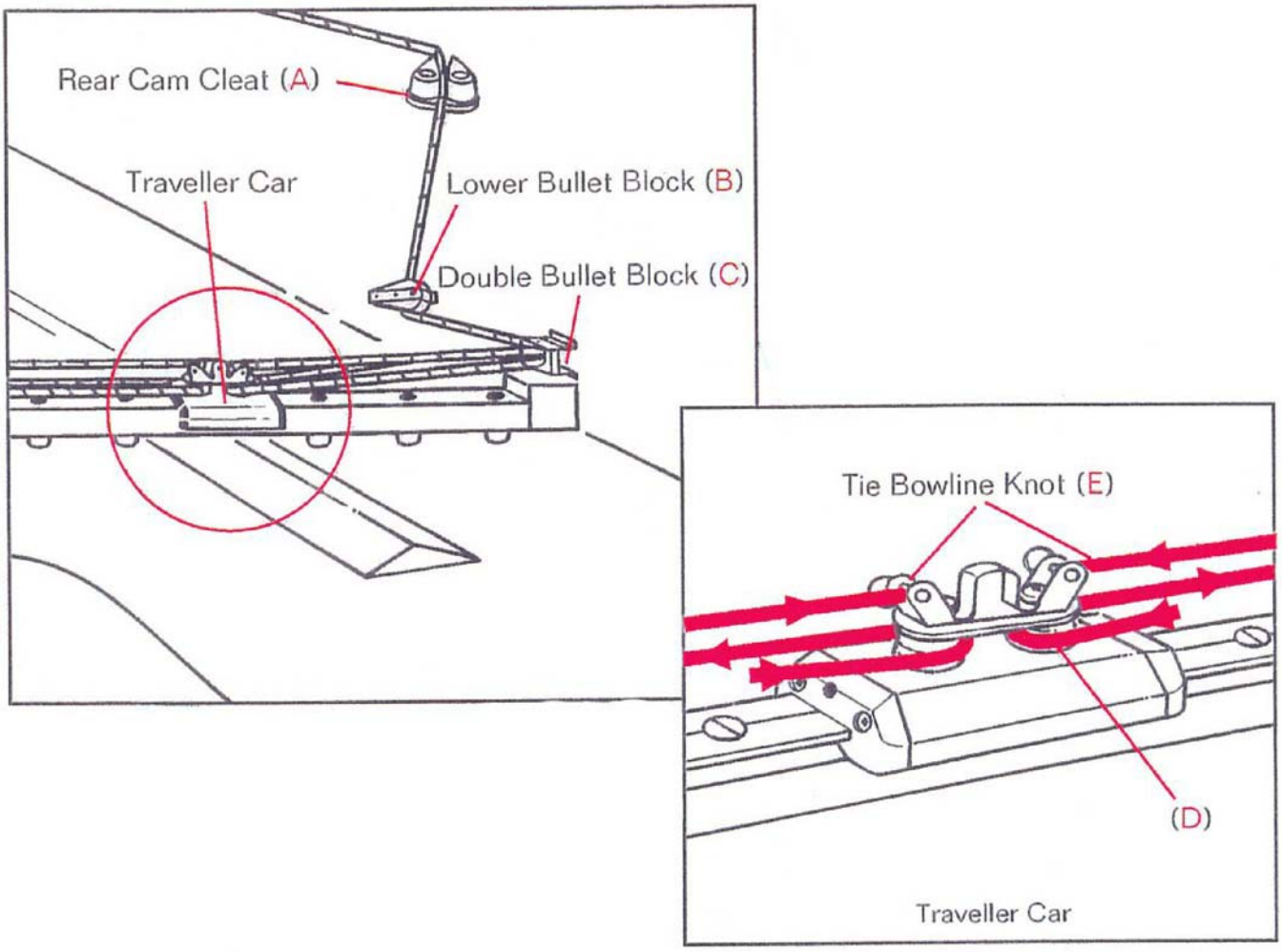

This operates using a continuous line.

1. TAKE ONE END OF THE LINE through the rear Cam Cleat (A), through the rear, lower Bullet Block (B); through bottom sheave (C) from front to back; through sheave on car from the back (D); across to the lower Bullet Block again (C) and through the top sheave from front to back. before making off through the eye on top of the Car with a Bowline Knot (E).

2. MIRROR THIS PROCESS WITH THE OTHER LINE.

3. ATTACH HARKEN DOUBLE BLOCK TO TOP OF TRAVELLER.

Rigging the Boom Vang System

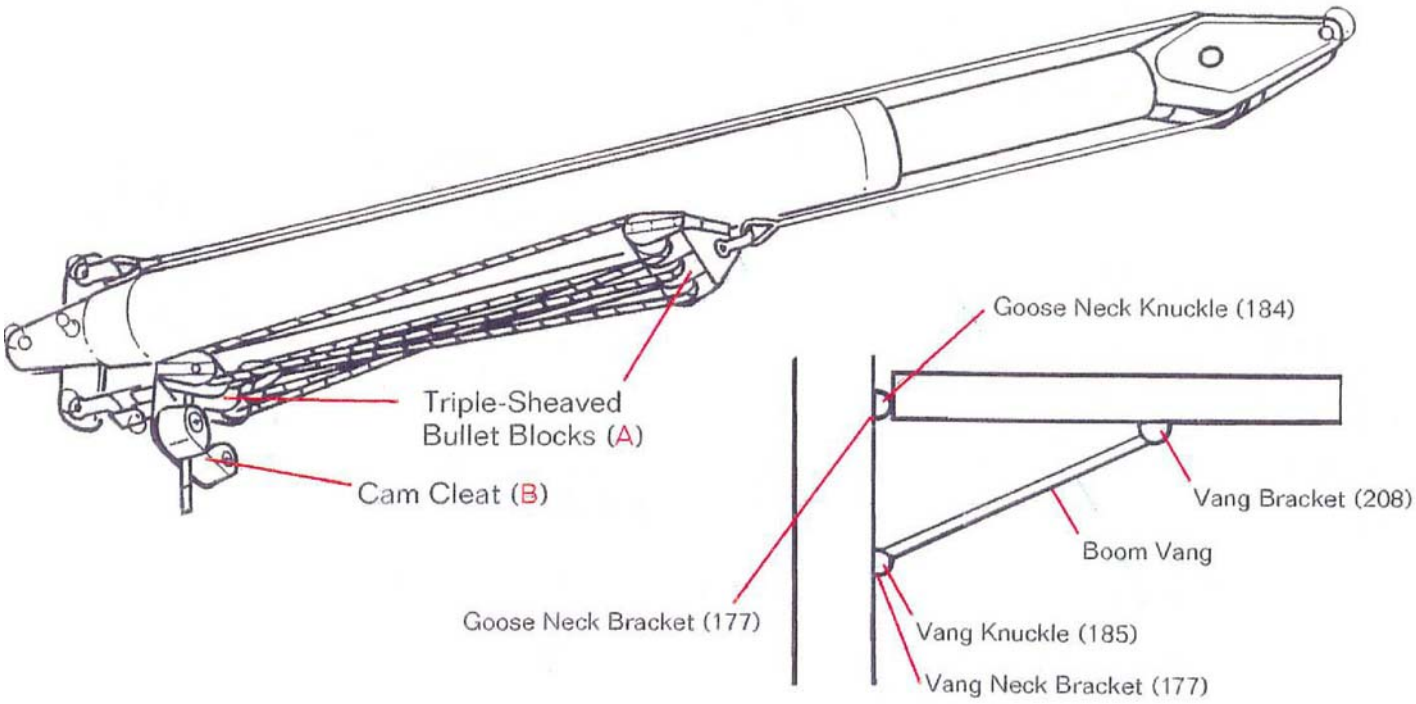

This is rigged by means of a continuous line which runs through two Triple-Sheaved Bullet Blocks (A) before securing on the Cam Cleat (B). The Vang is pneumatic and is pressurised by pumping it -up with the pump provided (See below for instructions).

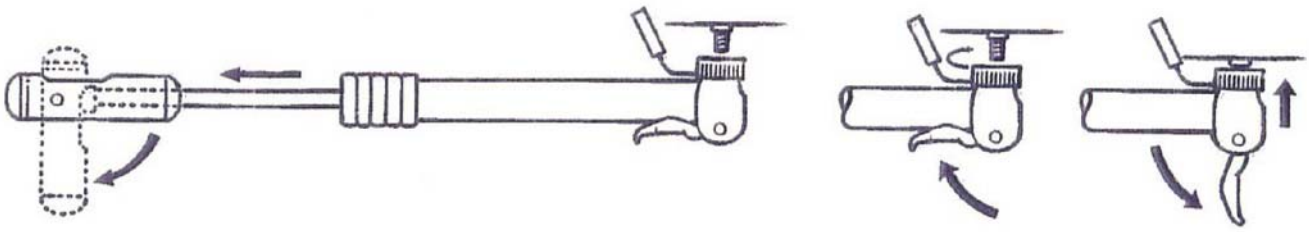

1. Pull handle from pump body, rotate handle to form a 'T',
2, Remove mud cap,
3, Be sure pump head is adapted to fit valve type.
4. Push head onto valve (adjust head cap if necessary to fit over valve)
5. Flip down thumb lock Lever to lock head onto valve.
6. Inflate to desired pressure.
7. Reverse directions for removal.

Rigging the Mainsheet

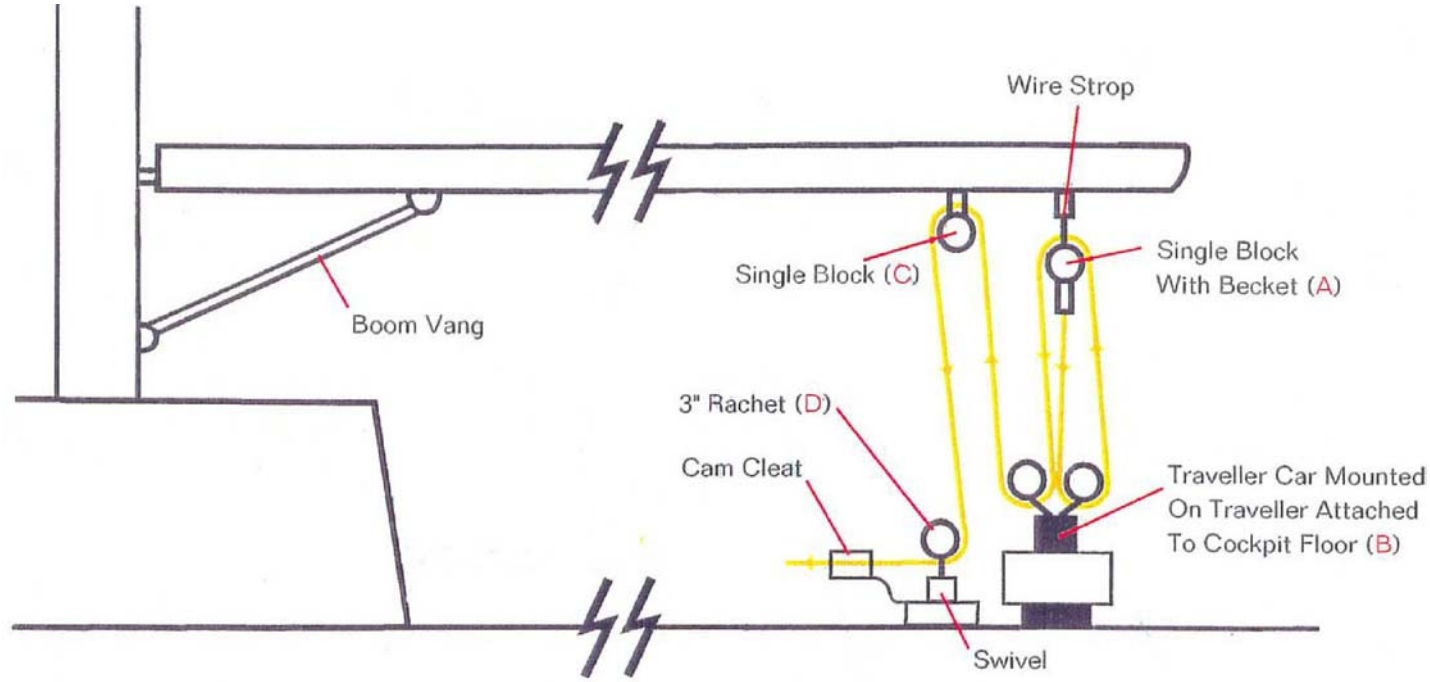

1. ATTACH THE SINGLE BLOCK WITH SECKET (A) to the wire strop coming from the rear eye on the Boom.

2. ATTACH THE SINGLE BLOCK (C) to the forward eye on the Boom.

3. ATTACH THE DOUBLE BLOCK (B) to the Traveller Car.

4. TIE THE MAINSHEET TO THE BECKET (A) and run it down through one of the sheaves on the Double Block (B), backup to the Rear Block (A), back down to the Double Block (B) and through the second sheave, back up to the Forward Block (C), back down to the sheave (D) behind the Cam Cleat on the Cockpit Floor. Then tie a figure 8 in the end of the mainsheet.

Deck Hardware Layout

Traveller and Mast Bulkhead Controls

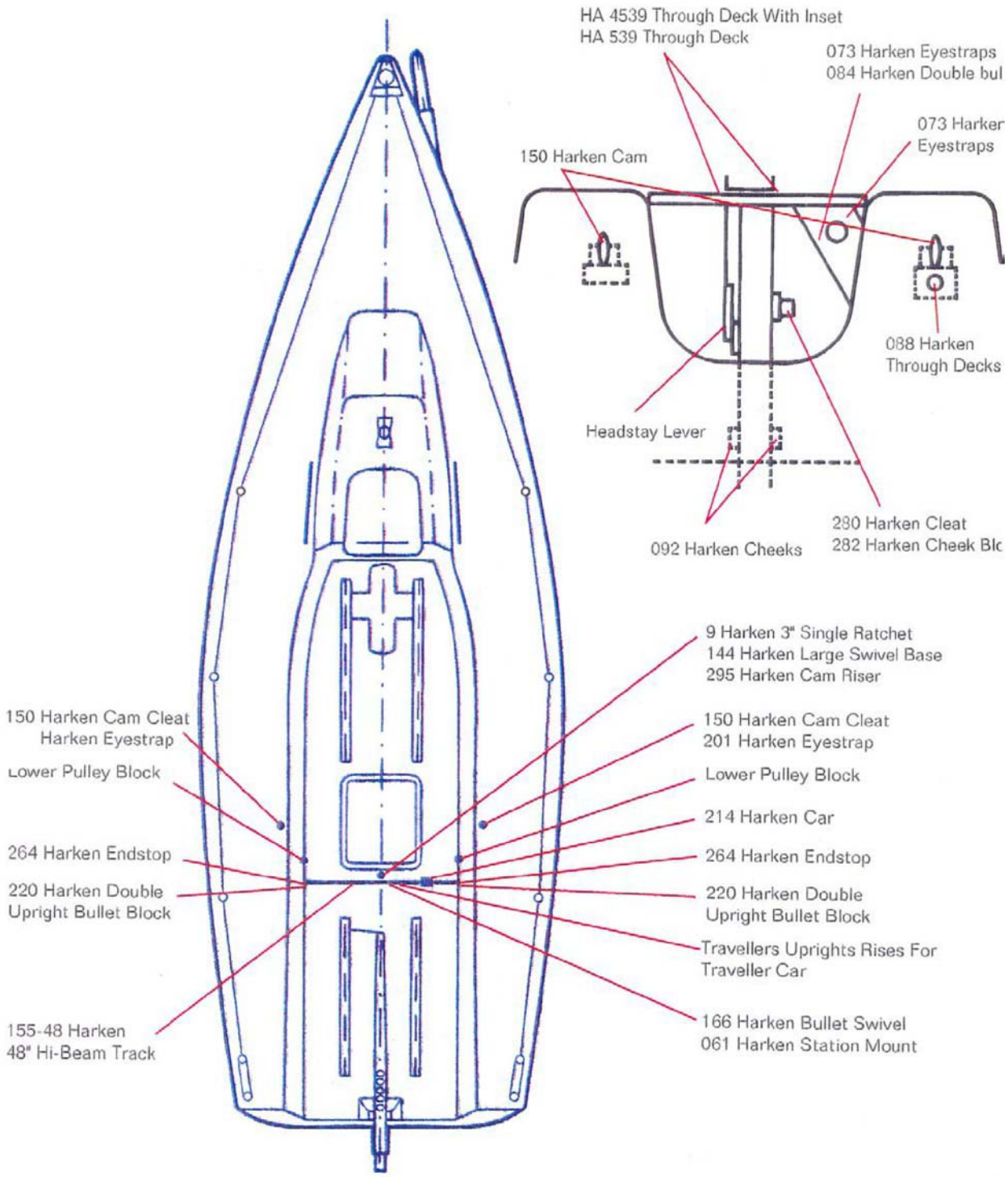

Stanchions and Deck Pulleys

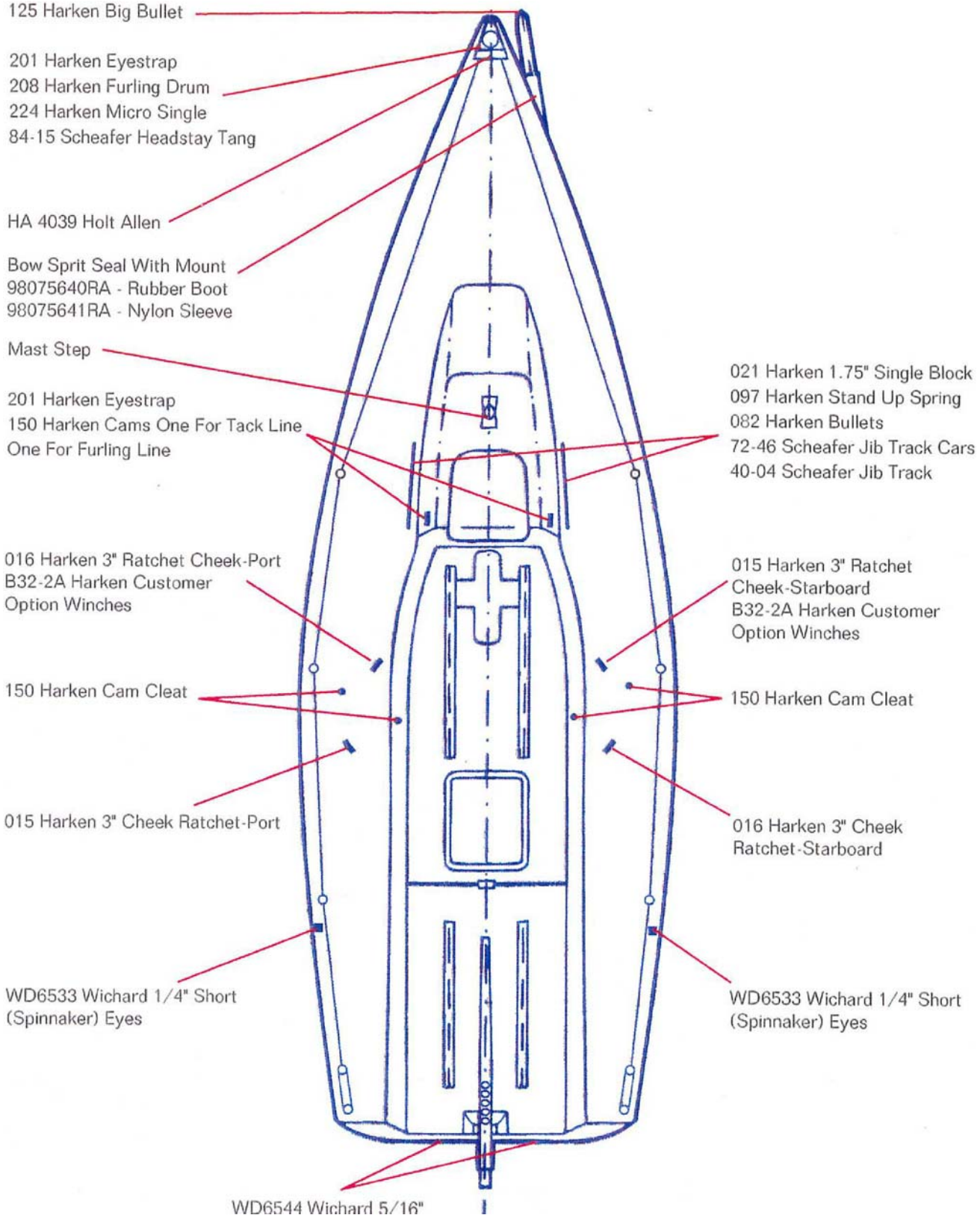

Melges 24 Rigging List

ITEM	NO.	DIAMETER	LENGTH		COLOUR	Material	WHIPS	EYE SPLICES
LIFELINE LASHING	2	4mm	1m		WHITE	PRESTRETCH	0	0
BOOM SHOCKCORD	I	5mm	1m		WHITE	SHOCKCORD	0	0
CUNNINGHAM	(3)	5mm	2x6ft	1x2ft	BLUE	PRESTRETCH	6	0
OUTHAL PURCHASE.	1	5mm	5ft		RED	PRESTRETCH	0	0
FURLER LINE	1	5mm	23ft		RED	PAESTRETCH	I	0
OUTHAUI.	1	6mm	20ft		WHITE	MATT	1	0
REEF LINE (OPTIONAL>	1	6mm	32ft		BLACK	DYNEEMA	2	0
SPRIT INHAUL	1	6mm	25ft		BLACK	DYNEEMA	I	0
SPRIT OUTHAUL	1	6mm	21ft		YELLOW	DYNEEMA	I	0
BACKSTAY ADJUSTER	1	6mm	30ft		RED	DYNEEMA	2	0
TRAVELLER	2	6mm	15ft		BLUE	DYNEEMA	2	0
SPINNAKER HALYARD	1	8mm	75ft		WHITE/BLUE	[)YNEEMA	2	0
TACK LINE	1	8amm	40ft		YELLOW	DYNEEMA	2	0
MAIN SHEET	1	8mm	60ft		YELLOW	DYNEEMA	2	0
JIB SHEET	1	8mm	56ft		BLUE	DYNEEMA	2	0
SPIN SHEET PORT	1	8amm	61ft		RED	DYNEHAA	2	0
SPIN SHEET STARBOARD	1	8mm	61ft		GREEN	DYNEEMA	2	0
MAIN HALYARD	1	8mm	75ft		WHITE,GREEN	DYNEEMA	2	0
JIB HAUARD TAIL	1	6mm	32ft		BLACK	BRAID	I	1 (2" SOFT)
BOW LINE	1	10mm	15ft		BLUE	BRAID	I	1 (2" SOFT)

ITEM	No.	DIAMETER	LENGTH	FITTING
Lower Jib Halyard	1	5mm 7x19	785mm Pin to pin	Highfield, Swage Bottlescrew, Fork
Jib Halyard	1	5mm 7x19	8255mm to centres	2 x swage eye, drill one eye for strop
Jib Strop	1	2.5mm 7x19	290mm total wire, continuous loop	Talurite ferrule, tape
Cap Shroud	2	3/16 Dyform	8355mm O.A. (4040mm bearing on T to bottom of top nipple	T-terminal, 2 x nipple (one fitted one loose) Ronstan rigging screw (loose)
Lower Shroud	2	3/16 Dyform	4390mm (Bearing on T to bottom of stud)	T-terminal, Ronstan rigging screw
Backstay	1	3mm 1x19	9775mm to centres	Swage eye, Swage fork. Drill fork to ¼”
Backstay Adjuster	1	3mm 7x19	3240mm to bearing	2 x SS Thimble, 2 x Talurite Ferrule
Keel Crane	1	4mm 7x19	3500mm (Bearing to raw end)	1 x SS Thimble, Talurite Ferrule
Lifeline Side	2	4mm Plastic	6140mm (Bearing to centre)	Swage toggle, Swage Lifeline Eye & Stud
Lifeline Stern	1	4mm Plastic	1875mm (Bearing to centre)	Swage toggle, Swage
Outhaul Wire	1	3mm 7x19	670mm (Bearing to raw end) Hard Eye on Harken single and becket	SS Thimble, Ferrule (Harken from BAE)
Mainsheet Strop	1	4mm Plastic	295mm to bearings	2 x SS Thimble, 2 x Talurite Ferrule

Rigging Runs

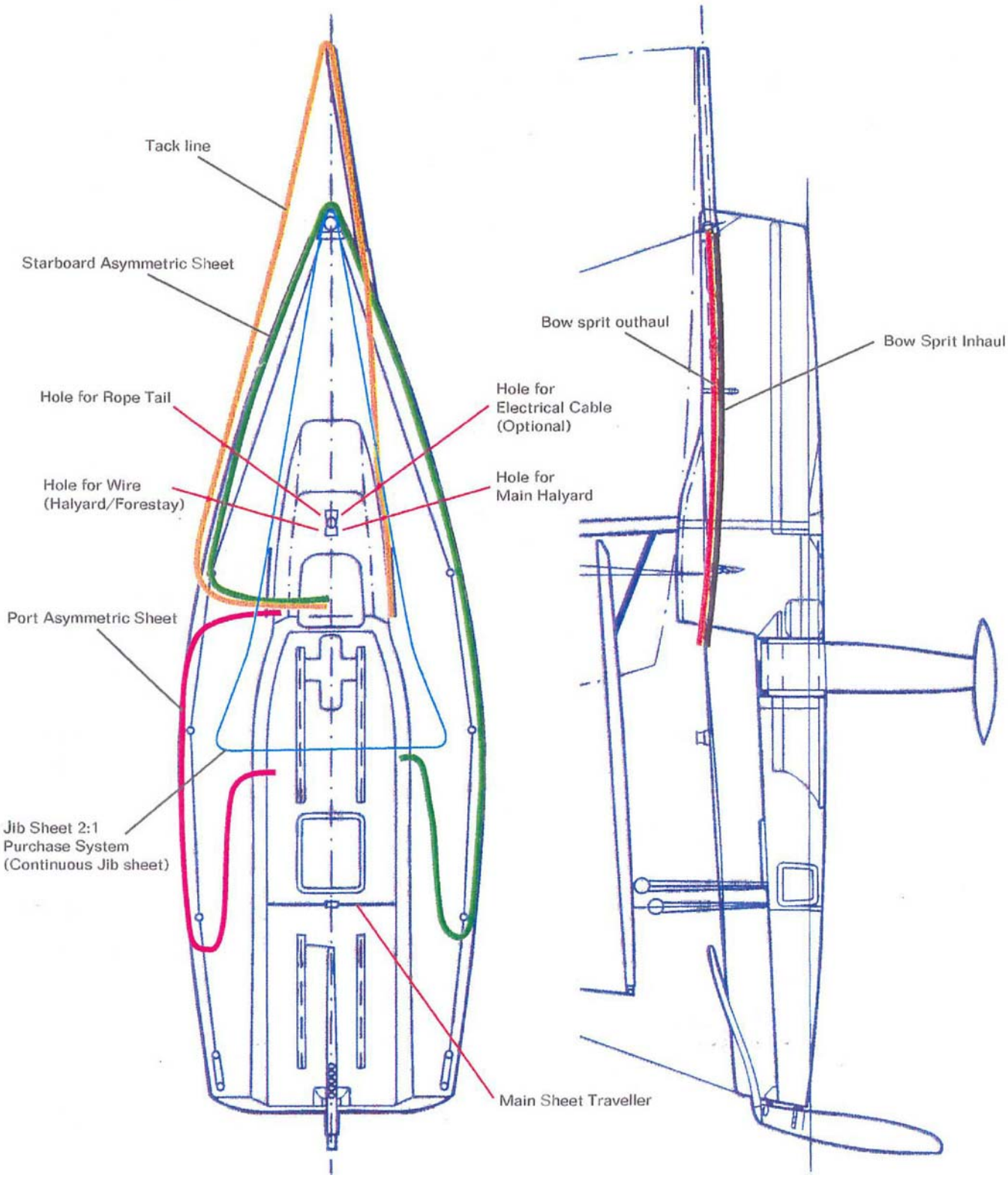

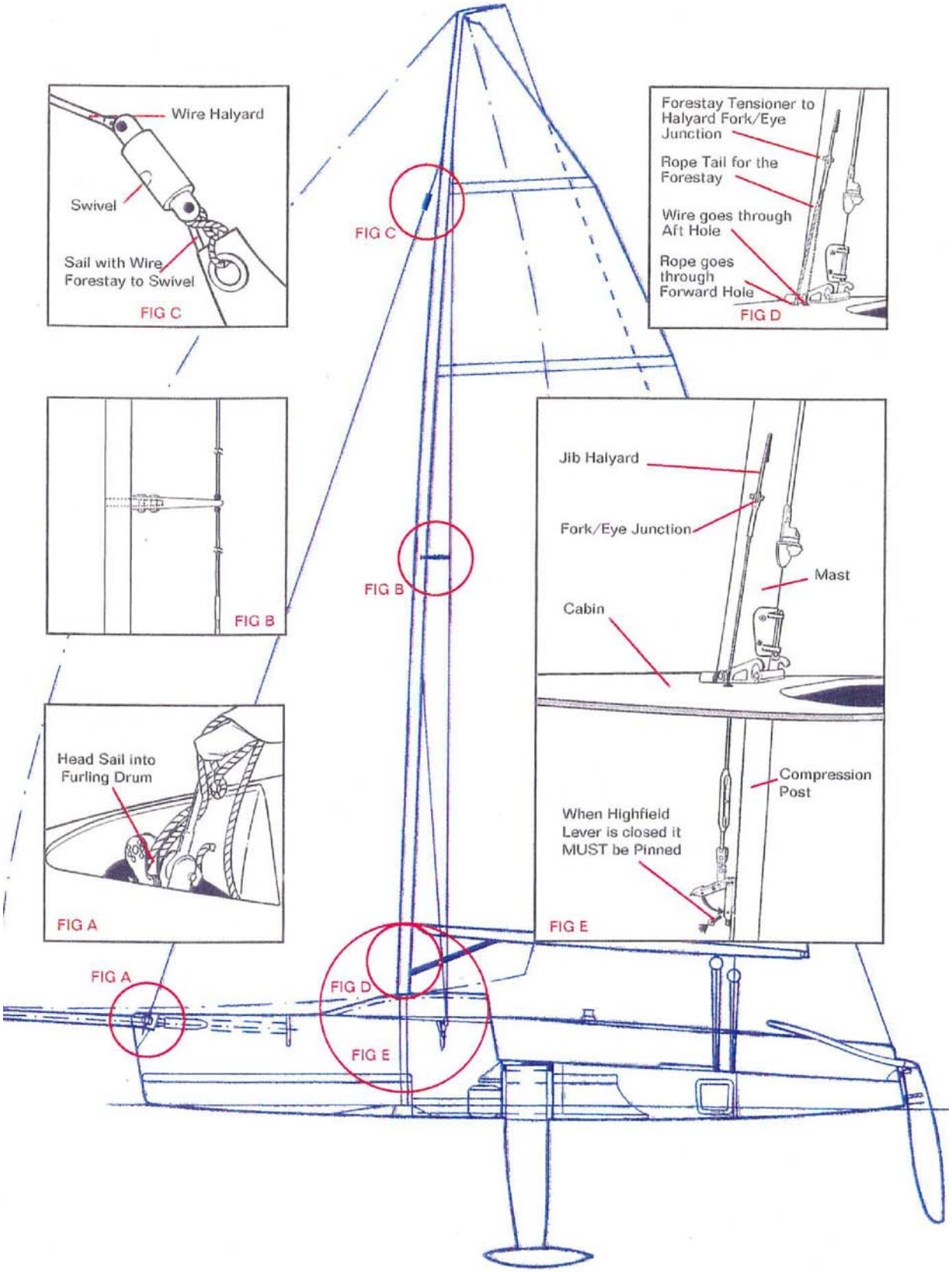
Wire Halyard
Swivel
Sail with Wire Forestay to Swivel
FIG C
FIG C
Forestay Tensioner to Halyard Fork/Eye Junction
Rope Tail for the Forestay
Wire goes through Aft Hole
Rope goes through Forward Hole
FIG D
FIG B
FIG B
Jib Halyard
Fork/Eye Junction
Mast
Cabin
Head Sail into Furling Drum
FIG A
Compression Post
When Highfield Lever is closed it MUST be Pinned
FIG E
FIG A
FIG D
FIG E

Preparing your Melges 24 for the water

1. UNTIE THE MAST, but leave it on its rest, with the mast tip pointing, and the spreaders angled downwards.

2. ATTACH THE LOWERS AND BACKST A VS TO THE MAST.

The Lower Shrouds are attached by means of two T - bars, which are inserted into the mast at right-angles, and turn through 90° to lock in. (fig I)

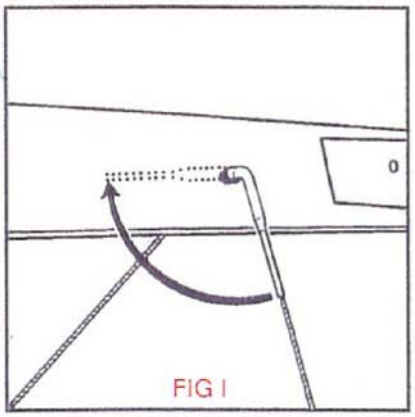

FIG I

3. LOOSELY ATTACH THE LOWERS, CAP SHROUDS AND BACKST AY TO THE BOAT. (fig II) Chainplates for the Shrouds are located either side of the tabernacle while the backstay chainplate and block are located on the transom.

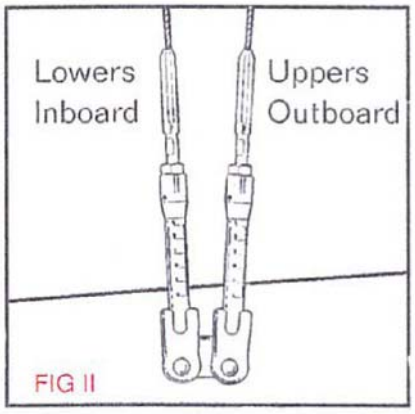

FIG II

4. LIFT MAST AFT, until pivot bar on Mast Rock aligns with hook on mast step.(fig III)
This unique feature makes mast fitting easy. even when undertaken by only two people, although three people are, recommended; N.B. Never attempt to fit the mast alone. ",

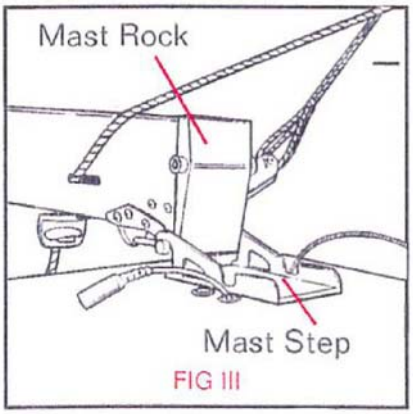

FIG III

5. RAISE MAST. One person attaches Spinnaker Halyard to the Trailer Winch
(fig IV). Then using the Winch pull the Mast into the upright position. at the same time the other(s) push the mast upright from the aft of the Boat (fig V). Taking care not to entangle the Rigging in the Mast/Boom Holder.

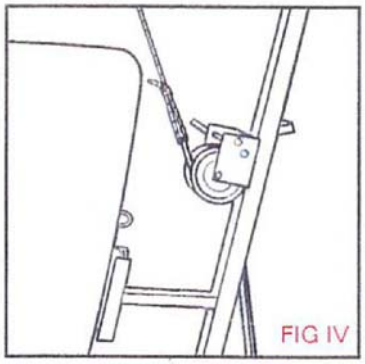
FIG IV

6. ONCE THE MAST IS UPRIGHT. Use the Winch to tension the Rigging (fig IV).

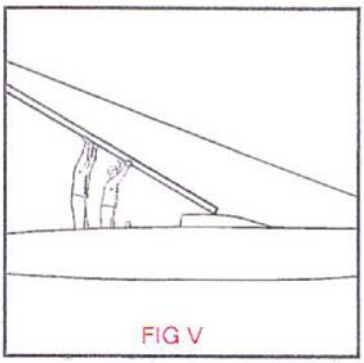
FIG V

7. ATTACH BOTTOM OF HEADSAIL / FORESTAY TO THE FURLING DRUM, after first ensuring that sufficient rope is wound around the furling drum (fig VI). The Forestay is an integral part of the Headsail. Please also note that the Headsail must be furled CLOCKWISE on the furling drum to prevent fouling.

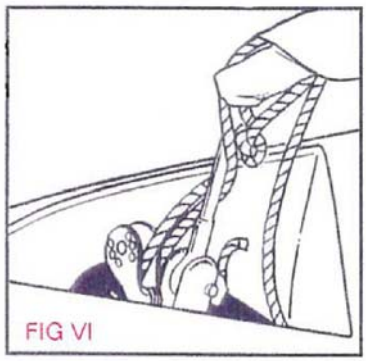
FIG VI

8. ATTACH THE SWIVEL TO THE TOP OF THE FORESTAY WIRE (fig VII).

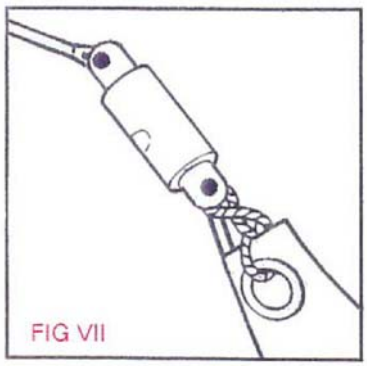
FIG VII

9. PULL THE HEADSAIL UP, using the Black/Yellow Jib Halyard. Attach the wire from the Halyard to the Highfield wire near the base of the mast and close the Highfield Lever inside the cabin, before locking it into position with the pin (fig VII). Then adjust tension of luff using Cunningham line on headsail that runs to Bullet Block on Furling Drum.

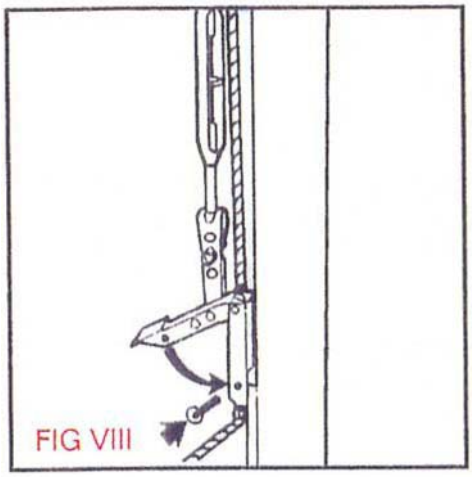
FIG VIII

10. LET THE SPINNAKER HALYARD OFF THE WINCH, and attach it to the Stanchion on the Deck of the boat

11. FURL HEADSAIL

12. MOUNT THE BOOM to the mast, by dropping the fixing pin through the Boom Gooseneck, and securing with the ring underneath (fig IX)

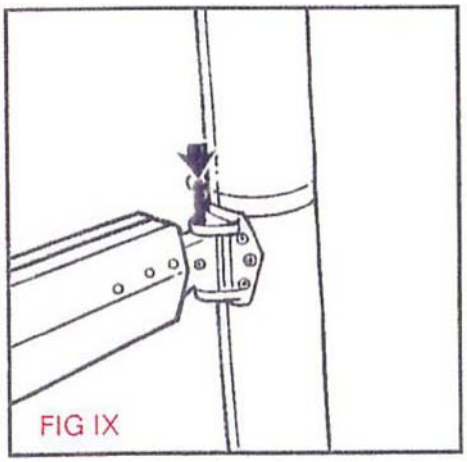
FIG IX

13. SECURE THE MAINSHEET TO THE BOOM (See page 13).

14. SUPPORT THE BOOM WITH THE MAIN HALYARD AND MOUNT THE BOOM VANG to the mast with the fixing pin, and then onto the Tang on the Boom itself with the pin and fixing ring (fig X). This Vang (or Kicker) is pneumatic, and is pumped up to the required level with the pump provided (See page 12). It controls the leech of the Mainsail by preventing the Boom from lifting.

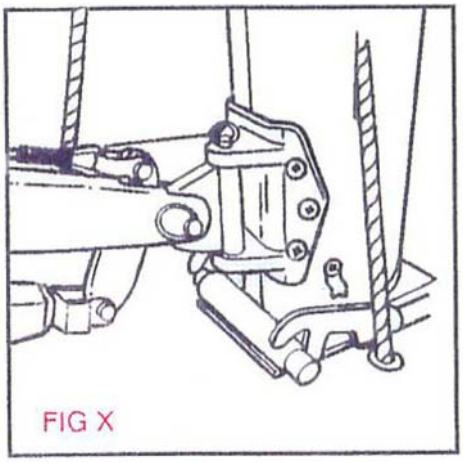
FIG X

14. MOUNT THE ENGINE BRACKETTO THE TRANSOM, by placing the four 'Keyholes' (fig XI) over the mounting pins and pushing the bracket downwards till it locks onto the mounting pins. This is then secured by sliding the locking clip over the top left 'Keyhole'.

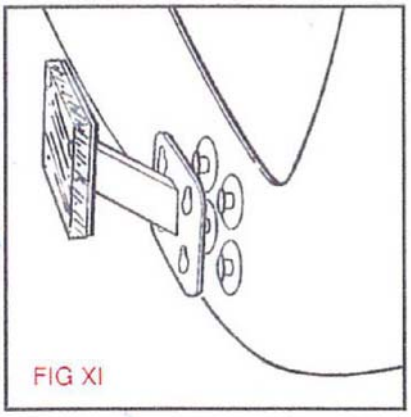
FIG XI

15. MOUNT THE ENGINE onto the bracket, tighten securely, and then tilt the engine to give the prop maximum ground clearance (fig XII).

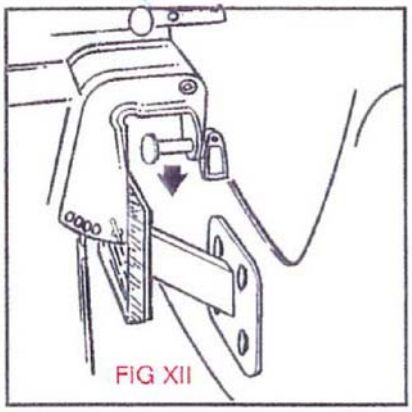
FIG XII

16. TUNE RIG. See Tuning Guide for suggested settings.

17. MAINSAIL. Take mainsail out of bag and unroll it. Put battens into pockets in sails (Fig. A) then push the velcro tags inside with the rod provided and tension them (Fig. B). Leave battens so they are very firm for light-medium conditions to power up and remove wrinkles (Fig. C). Leave battens loose to medium tension for heavy air to flatten main. Consider stiffer battens for extreme conditions. N.B. Leave a short piece of line hanging out after tensioning for releasing the battens when needed.

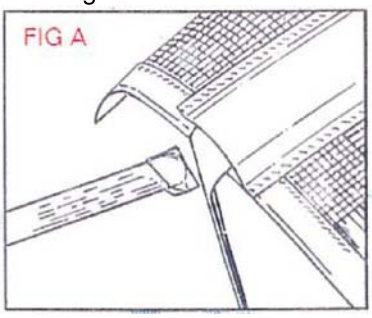
FIG A

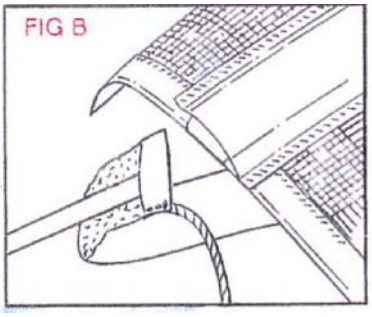
FIG B

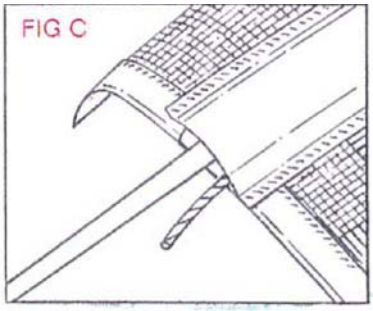
FIG C

GENERAL NOTES:
Grease trailer bearings and all winches -regularly. Tape over all sharp edges to avoid sail damage. Keep rudder, tiller and hatches well protected when not in use, to prevent chipping and scratching.

Launching Your Melges 24

1. RAISE THE KEEL ABOUT 1” using the retraction tube.

2. REVERSE THE TRAILER AND VEHICLE TO THE WATER'S EDGE, and put the trailer brake on.

3. DETACH TRAILER, and drive the vehicle forward for a few yards.

4; ATTACH A LINE FROM THE TRAILER TO THE VEHICLE, and take up any slack in the line, let the trailer brake off, and reverse the vehicle until the trailer is submerged and the boat is nearly afloat.

5. DISCONNECT THE BOAT FROM THE TRAILER WINCH.

6. LOWER THE OUTBOARD MOTOR INTO THE WATER, start it up and reverse the boat off the trailer. Then drive trailer out of the water, apply the trailer brake, reconnect the vehicle, release the trailer brake and park your trailer away from the slipway.

7. MOOR YOUR BOAT TO A JETTY/PIER.

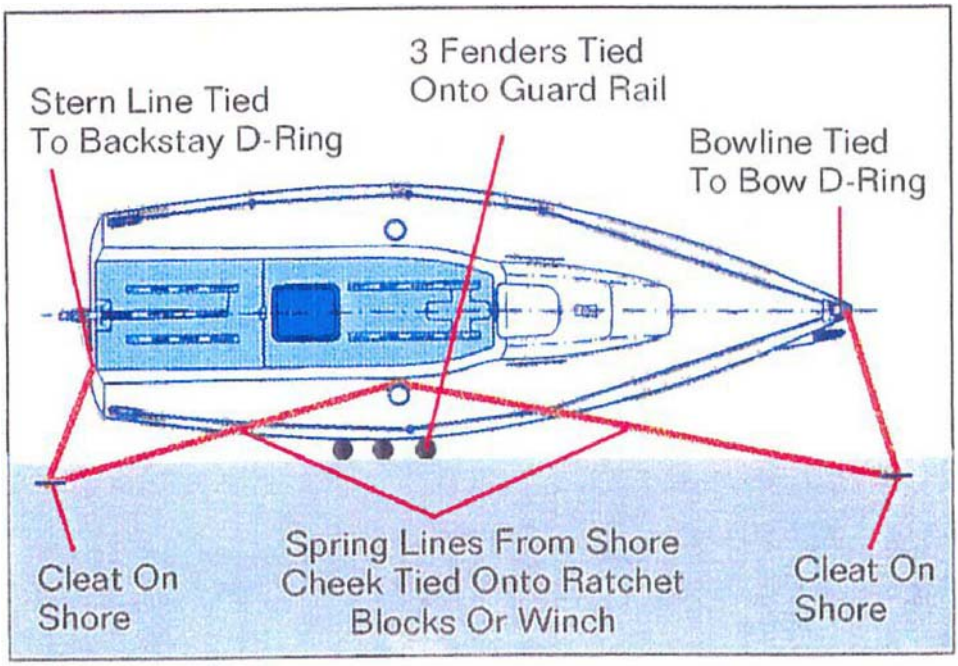

8. LOWER THE KEEL FULLY US1NG THE WINCH. Then disconnect the Retraction Tube and place it bracket of your trailer.

9. UNSCREW THE EYE ON TOP OF THE KEEL and retain it in your kit bag.

10. RETAIN THE KEEL USING THE KEEL STRAR to prevent it from lifting when sailing (fig XIII).

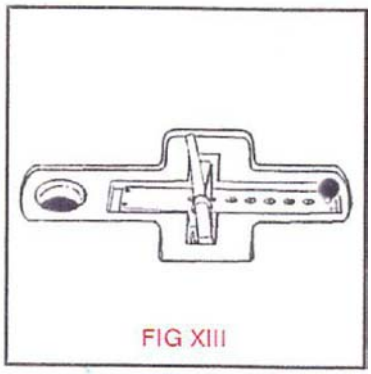

FIG XIII

11. UNSCREW THE WEED CUTTER BALL,
(fig XIV) put the keel plate in place with the three securing screws, and then screw the ball back onto the Weed Cutter thread. (This can be used while sailing, simply by lifting the ball up until the cutter blade hits the striker plate on the bottom of the hull, then pushing it firmly back down again. thus cutting any weed wrapped around the keel}.

FIG XIV

'12. TIE A SAFETY LINE ONTO THE ENGINE, and remove the mounting bracket with the engine still attached. Turn the fuel and the breather cap to 'OFF' and stow the engine below. Ensure that you stow it with the petrol tank going into the hold first. push the engine forward to the boat's centre of gravity in the engine tray, and rest the prop on the shock cord to protect the hull from damage.

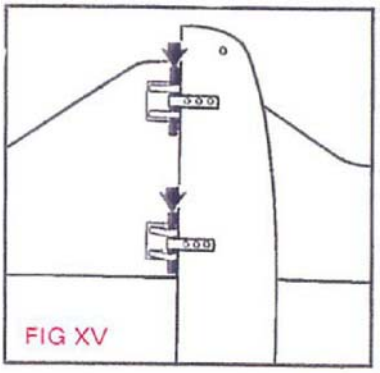

FIG XV

13. MOUNT THE RUDDER ON THE GUDGEONS. securing it in place with the locking Pintles (fig XV). Then attach the tiller arm with its securing bolt and nut (fig XVI).

14. SECURE THE REAR LIFELINE.
15. RIG YOUR BOAT.

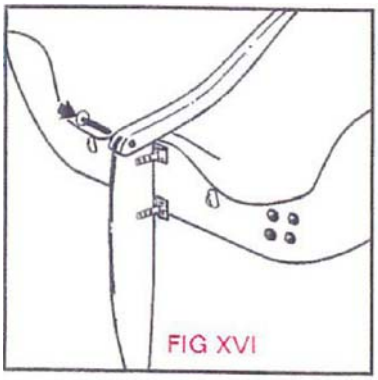

FIG XVI

Rigging the Tack Line

1. RUN THE TACK LINE through the Cam Cleat on the starboard side of the cabin top. (Fig. I)

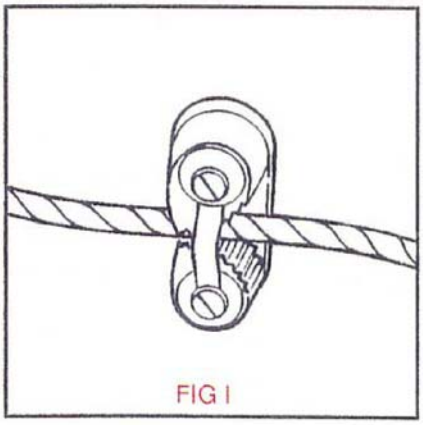
FIG I

2. RUN THE LINE THROUGH THE BULLET BLOCK ON THE END OF THE BOW SPRIT (Fig II), around the outside of the forestay and the shrouds, and attaches to the tack on the Spinnaker (FIG III).

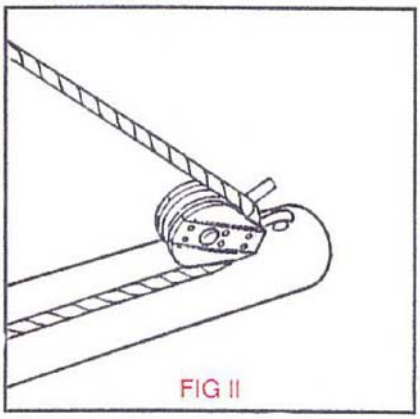
FIG II

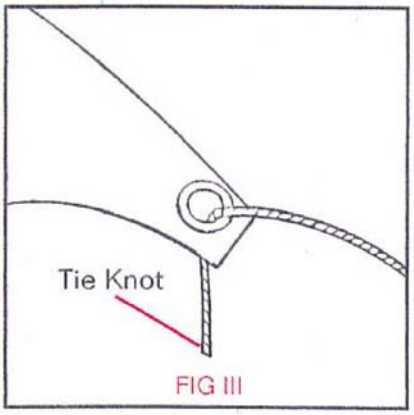

FIG III

Rigging the Spinnaker Sheets

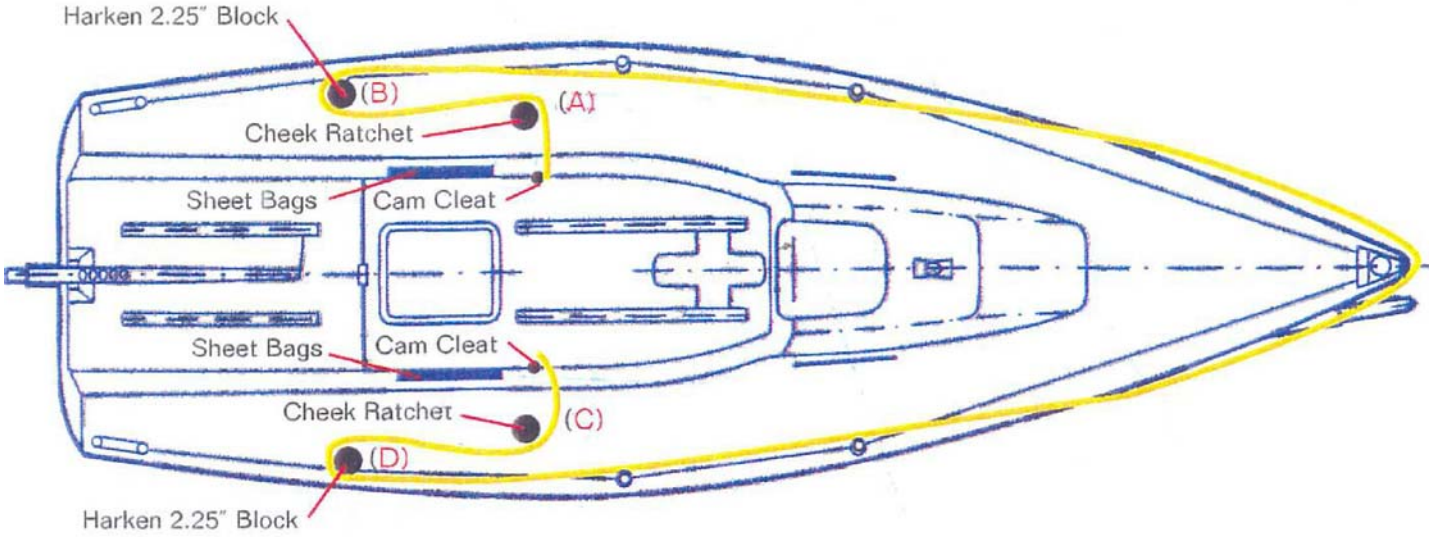

1, THE STARBOARD SPINNAKER SHEET runs through the rear Cheek Ratchet (A) then through the Harken 2.25" Block (B).

2. IF GYBING INSIDE, take the sheet under the tackline that runs back to the sail

2'a.IF GYBING :OUTSIDE, leave the sheet over the tack line.

3. THE SHEET THEN GOES AROUND THE FORESTAY, outside the safety lines and ties onto the Spinnaker Clew.

4 THE PORT SPINNAKER SHEET runs through the rear Cheek Ratchet (C) then through the Harken 2.25"Block (D). then outside the safety lines and onto the Spinnaker Clew.

5. ONCE BOTH SHEETS ARE RIGGED, use the Cam Cleats inboard of the rear ratchets to secure them and store the excess in the mesh sheet bags.

NB. THE EXAMPLE ABOVE IS FOR WHEN LAUNCHING ON PORT SIDE. YOU WOULD REVERSE THE INSTRUCTIONS FOR EACH SHEET IF LAUNCHING ON THE STARBOARD SIDE.

Rigging the Jib Sheet

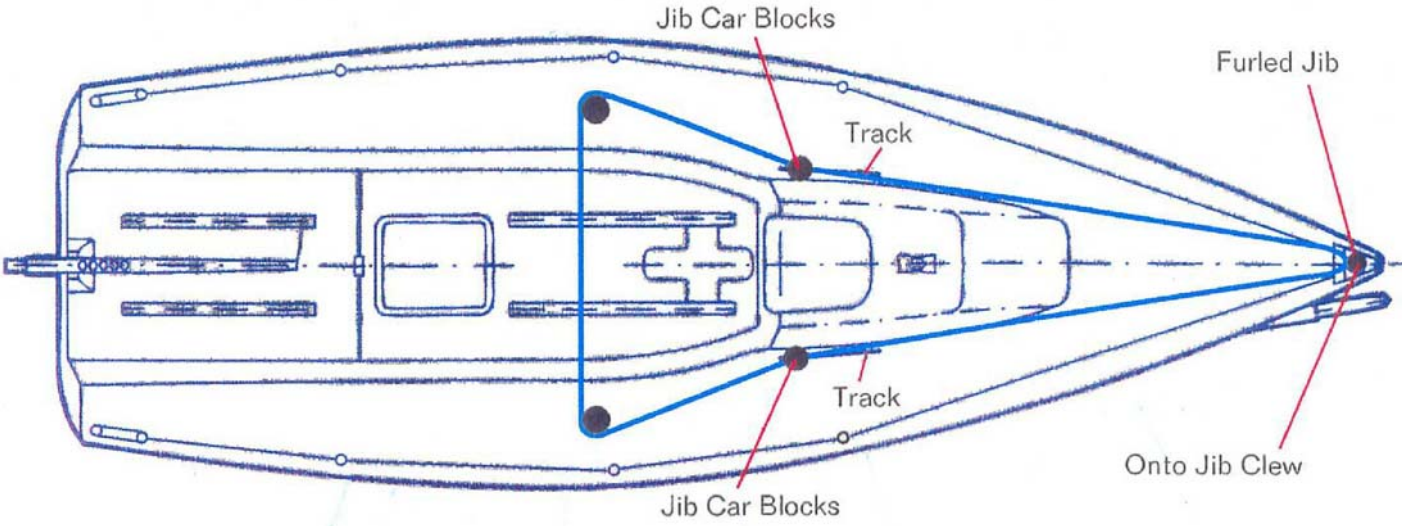

1. ATTACH THE JIBCAR BLOCKS. These slide onto the tracks either side of the cockpit and screw into the track using knurled bolts. These tracks have been treated with clear alochrome to prevent corrosion.

2. RUN THE JIB SHEET THROUGH THE PORT CHEEK RATCHET BLOCK, then through one of the Bullet Blocks on the jib clew, back to . the Port Car Block, where it ties off on Jib Car eye, with a figure 8 knot.

3. THE OTHER END OF THE JIB SHEET crosses the deck, through the front Cheek Ratchet, through the starboard Car Block, through the other Bullet Block on the Jib Clew, and then ties off on the eye of the starboard Car Block with a figure 8 knot.

THERE ARE CAM CLEATS NEXT TO THE FRONT RATCHET BLOCKS FOR SECURING THE JIB SHEET WHEN THE SAIL IS PULLED 'N.

Recovering your Melges 24

1. REVERSE THE TRAILER AND VEHICLE INTO THE WATER.

2. DETACH TRAILER. and drive the vehicle forward for a few yards.

3. ATTACH A LINE FROM THE TRAILER TO THE VEHICLE, and take up any slack in the line, let the trailer brake off, and reverse the vehicle until the trailer is nearly submerged.

4. RUN OUT 6ft OF LINE ON THE TRAILER WINCH.

5. RAISE THE KEEL FULL V, using the retraction tube.

6. ATTACH THE OUTBOARD MOTOR a$ before, remembering to use a safety line. then drive the boat slowly onto the submerged trailer. No pull on by Bowline.

7. ATTACH THE TRAILER WINCH TO THE HOOK ON THE BOW and carefully winch the boat onto the trailer. .

8. DRIVE THE VEHICLE FORWARD, until the trailer is clear
of the water. Apply the trailer brake, detach line, then reverse vehicle back to trailer, hook them up and drive clear of the slipway, watching for power lines and trees.

9. LOWER THE KEEL, using the retraction tube, until the bulb of the keel sits in the padded holder in the trailer, severe damage
will occur to keel fin if this is not done. .

10. DE-RIG AND DE-MAST YOURBOAT; reversing all previous. directions, taking care to check for power lines and trees.

11. NB. PLEASE ENSURE THAT YOUR BOAT AND MAST ARE FULLY SECURED BEFORE DRIVING OFF.

Spares

ITEM	DESCRIPTION	QUANTITY	ITEM	DESCRIPTION	Qty
Keel and Top Plate			**Mast**		
	Laminate	1		Mast Complete	1
	Keel hold-down strap	1		Rocker Plate Bottom	1
Engine Draw				Mast with 4 pins	1
	Laminate	1		Gooseneck Bracket	1
Vang				Vang Bracket	1
	Vang with stickers	1		Shroud Lower Turnbuckle	2
Misc				Shroud Upper Turnbuckle	2
	Liner boards for interior	6		Backstay – Permanent	1
	Cabin Stickers	2		Gooseneck Knuckle	1
Drop Board Frame				Boom Vang Toggle	1
	Frame (Laminate)	1		Spreader Tang	1
	1/8” Transparency (tint)	1		Spreaders	2
	Teak Beam on vertical hatch	1		Mast Crane	1
	Lock Bracket	1		G10 Insert for Mast	1
Cockpit Hatch			**Stanchions**		
	Top Hatch (Laminated)			Stern Rails	2
	Hatch Tangs	21		Stanchions with legs	4
Companionway Hatch			**Keel Retraction Tubes**		
	Hatch (Laminated)	1		Keel Retraction tube complete	1
	Flushlock	1	**Bow Sprite**		
	Hinges	2		Bow sprite complete	1
Keel & Bulb				Holster	1
	Lead Keel Bulb	1		Single Bush	1
	Keel Guides Large (11.95”)	2	**Rudder and Tiller**		
	Keel Guides Small (6.75”)	2		Rudder	1
	Vertical Deldrins	2		Tiller	1
	½” treaded rod to hold bulb on 3” per boat	1		Tiller Extension	1
	Keel Fin	1		Tiller Extension Clip	1
	Keel Weed Cutter	1	**Trailer**		
	Keel Top Plate	1		Hold down bar	1
	Keel Lifting Ring	1		Straps for hold down bar	2

Distributor

Devoti Sailing Ltd
Appleberry by the Gables
Stoney Hills
Burnham on Crouch
Essex
CM0 8QA
T: +44 1621 782603
F: +44 1621 785735
E: sales@devotisailing.com

Customer Options

ITEM	DESCRIPTION	Qty	ITEM	DESCRIPTION	Qty
Electrical Package Complete			**Others**		
	Sterns Light	1		Windex	1
	Bow Lights	1		Cooler	1
	Electrical Panel	1		Cooler mounting hardware	2
	Battery	1		Jib Sock	1
	Wire 29’ 18 Gauge Duplex 18.91 Per 100’	1		Cushions	1
	Eye and butt connectors	35		Boom Cover	1
	KVH 103AC	1		Porta Poti	1
	MBW 6”x6 Aluminium mounting bracket	1		Dock Fenders	2
	Display Bracket	1		Outboard Motor 4hp	1
	Autohelm ST50 Plus	1		Outboard Motor 3hp	1
	Autohelm ST30 + Master Sensor	1		Mooring Lines	2
Spinnaker Bag Complete				Anchor and chain warp	1
	Spinnaker Launch Bag	1		Bilge Pump	1
	Micro Cheeks	2		Winches	2
	Micro Bullets	2		Trailer	1
	073 Eyestraps	2		Keel Retraction Tube	1
	Micro cleat with fairlead	1		Outboard Bracket	1
	9’ 5/32” Prestretch	1		Pinnel & Bax Sails Complete	1
	15’ ¼” Shockcord	1		Diamond Sails Complete	1
Stanchions				Extra Spinnaker (P&B)	1
	Bow Pulpit	1		Extra Spinnaker (Diamond)	1
Bags				Lifting Straps	2
	Sheet Bag	3		Under Cover	1
	Rudder Bag	1		Over Cover	1
	Vang Bag	1			
	Hatch Bag	1			
	Tiller Bag	1			

Melges 24 Sails

Two manufacturers have developed sails for the Melges24, which offer a high level of performance throughout the wind range. These sails are fully optimised to the One Design Class Rules and incorporate the knowledge and experience gained over years of competing at the highest levels.

MELGES 24 MAINSAIL
Cloth: Mylar
Construction: Bi-Radial
MELGES 24 JIB
Cloth: Mylar
Construction: Tri-Radial
MELGES 24 SMALL / LARGE ASYMETRICSPINNAKER Cloth: Nylon
Construction: Tri-Radial

All Sails, come complete with Reefing' Points. Window, Insignia, Sail Numbers. National Letters. Battens, Tell Tails. Roll Sail Bags with handles and a Sail Tuning Guide.

Tuning Guide

A. PREPARING AND STEPPING THE MAST

1. Place a 1" stripe on the spreaders 198 out from the mast to aid in jib trim.

B. TUNING THE RIG

1. Set the mast rake at 36' 6 w. Pull a tape measure all the way up on main halyard and measure to bottom corner of transom.
2. Adjust turnbuckle at Highfield lever to change rake and when measuring rake, you must have some sidestay tension because as you lighten sidestays rake will change.
3. Shroud tension using a Loos tension gauge.

A. All purpose setting
Uppers – 650lbs lowers- tighten at dock to keep mast straight athwartships and set up with approximately 1/2" of pre-bend at spreaders.
B. Light Air Setting
Uppers - 200lbs. lowers - slack - sight up back side of mast while sailing, mast should sag to leeward 1/2 'at spreaders.
C. Heavy Air Setting
Uppers - 1000lbs.
Lowers - set up at dock so that mast Is straight athwartships and also straight fore and aft.

In general we're looking for a slight leeward sag in light air to power up the main a bit and also a loose rig will let the mast bend fore and aft to allow the draft to slide aft In the main and to allow the headstay to sag to create a more powerful jib. In medium air we're looking for a straight mast sideways and more control over headstay sag, thus a tighter rig. In heavy air we're looking to depower so we go with a very tight rig to achieve maximum headstay tension and this allows us to pull the backstay (more headstay tension) and the vang to allow vang sheeting going to weather- In heavy air we actually let the mast sag off to leeward up high to help depower the large roach mainsail and open the slot between main and jib.

C. SAIL TRIM
Hoisting the mainsail. .
Once all battens are in, put the tack slider into the groove at the bottom of mast. Then attach the Clew to the Outhaul. Attach the block and tackle Cunningham to the mainsail, and then take the main Halyard. (Before hoisting mainsail. make sure boat Is head to wind.) Ensure that Boom Vang is released and that the mainsheet is eased. Then, hoist the main fully, ensuring that the boat-rope feeds into the mast groove, before cleating off the main Halyard and tensioning the Cunningham.

1. Mainsail Trim Settings

Cunningham	Light - Loose.
	Medium -loose to wrinkles out when overpowered.
	Heavy - wrinkles out to very firm.
	Downwind -loose.
Outhaul	light - ease 1_
	Medium - to black band. .
	Heavy -to black band.
	Downwind - ease 2- to 3
Vang	Light - loose. .
	Medium - slack out to firm if vang sheeting.
	Heavy - firm If vang sheeting.
	Downwind - to batten parallel to boom.
Traveller	Light - pull to windward to keep boom centred.
	Medium - centre to 6" down to foot.
	Heavy - centre to 2' down to foot.
	Downwind - centre. .
Sheet	Light -Back 2' of top batten parallel to boom to "10 degrees open in light chop.
	Medium - Top batten parallel or twist when overpowered.
	Heavy - maintain twist to depower. adjust continuously for speed and stability.
	Downwind - keep luff active.
Backstay	Light - loose.
	Medium - pull In puffs to flatten and depower.
	Heavy - firm adjust often In puffy conditions.
	Downwind - eased

NOTE (UPWIND)
In some conditions ii pays to work, only mainsheet. and in some conditions it pays to work the backstay. Don't get lazy; be sure to experiment with each control to find out what works best for you.

2. Jib Trim Settings

Luff	Light - wrinkles out. Medium - wrinkles out. Heavy - wrinkles out.
Jib Car Placement	Light - set up so luff breaks evenly. Medium - same as light. Heavy - one to two notches back to flatten and twist jib.
Sheet Tension	Light - soft trim to achieve twist match jib sheet to underside of main luff. work continuously. generally outside spreader mark. . Medium - hit spreader mark in flat water, work jib out In waves. Heavy - in extreme puffs sail with jib eased to open slot and keep main from ragging and boat driving.

3. Spinnaker Trim Chart

Tack Line	Light - tack to pole. Medium - ease tack 1 ' to 2' to help sail rock to windward when sailing deep. Heavy - tack to pole.
Trim	All conditions - always trim to luff break, overt rimming Is deadly slow - keep working It out.
Steering	Light - keep the pressure on - apparent wind forward - tell tales pointing back. Medium - hunt down in puffs - apparent wind moves aft sail more like conventional keel boat. Heavy - keep the pressure on - apparent wind forward. keep the boat flying.
Gybing	Light - sheets inside tack. Medium- sheets inside tack. Heavy - sheets outside tack.

D. BOAT HANDLING

The Melges 24 is a very fast and responsive boat thus boat handling IS very important. Big gains can be made with smooth and correct boat handling.

1. UPWIND
When sailing upwind it is Important to be very smooth in the boat and to be very conscious of the angle of heel at all times. In light air roll tacking is a must and minimising crew movement is imperative. In stronger wind keeping the boat flat Is important so quick action on the crew from rail to rail is a necessity and you must work the sails to keep the boat moving in and out of tacks and in big waves. It is best to have the front two crew hike at all times and feed information to the helmsman about wind, waves, and often important information about other boats on the course. The crew just forward of the helmsman should trim the jib so the communication between skipper and jib trimmer is easy. When steering in light air the skipper "1I1$t concentrate on keeping the boat moving at .all times While the crew adjusts the sails and angle of heel. Generally don'_ pinch unless you have solid breeze and flat water. The skipper must work the main to keep the boat flat on her feet and driving.

2. DOWNWIND
Downwind is the funnest and fastest point of sail in the Melges 24 and correct downwind form can be exhilarating and challenging. Tactics become very important because of the hotter angles the boats sail at. so pay attention to the wind strength and compass headings. In light air, you must be very still in the boat and have total concentration. You must sail the boat at a higher angle than in a conventional keel boat to keep the apparent wind forward. Attach telltales to the sidestays and keep the telltales flowing back at all times in light air. As the wind increases you can begin to hunt down and sail low. be sure and watch the boats around you to see if you are gaining or losing. As the wind gets 10 the point where the boat will plane then you must once again keep the boat pressured up almost reaching. The boat will go much faster and the apparent wind will go forward.

4. Crew Weight Positions

Upwind	Light - forward, close together. low, promote same heel.
	Medium - close together stacked from middle stanchion, forward, boat flat.
	Heavy - same as medium.
Downwind	Light - same as light upwind.
	Medium - start sliding weight aft, keep boat flat.
	Heavy - slide as far aft as possible and hike. forward crew and vang.

Setting the ASYMMETRICAL SPINNAKER

A. Hooking up the sail.

1. Attach tack line to tack of sail. Both sheets to clew, halyard to head.
2. Far .outside gybes tack line should be under sheet, for inside gybes tack line should be and top of sheet.
3. We recommend setting behind shrouds to avoid ripping sail. If you set in front of shrouds, tape mast step, vang and put a piece of line from lower shroud to lower shroud.
1” below spreader.

B. To hoist in light to medium wind.

1. Extend bow sprit.
2. Sneak tack all the way out.
3. Hoist at mark.
4. Furl jib.
5. Ease backstay, vang. outhaul. Cunningham.
6. Coli spinnaker halyard and drop on cockpit floor.

C. Hoist in heavy air.

1. Same as above except only sneak tack out as far as you can and still maintain control of sail.

4. GYBING THE ASYMMETRICAL SPINNAKER

A. Gybe In light air.

1. Sheets Inside luff.
2. Ease sheet.
3. Turn boat.
4. Roll gybe.
5. Trim new sheet rapidly.

B. Gybe in heavy air.

1. Sheets outside luff.
2. Release sheet.
3. Turn boat.
4. Trim new sheet rapidly.

5. TAKE DOWN OF THE ASYMMETRICAL SPINNAKER

A. Windward take down.

1. Head straight downwind.
2. Release sheet, trim windward sheet directly out of ratchet.
3. Trim clew until it's just behind shrouds.
4. Let sail unwrap so leech is entirely clean.
5. Let halyard down.
6. Tack off, then pull pole in.

B. Leeward take down .of asymmetrical spinnaker.

1. Bear .off.
2. Overtrim sheet, keep tight.
3. Grab foot and ease halyard down so sail falls on deck.
4. Do not ease pole and tack until sails on deck and under control or it will go directly in the water.

C. Mexican take down of asymmetrical spinnaker.

1. Approach leeward mark one and a half boat lengths away on starboard tack.
2. Overstand mark slightly.
3. Gybe boat but not spinnaker overtrim spinnaker sheet.
4. As sail backs into rig on port side, blow off halyard and drop sail on deck.

SAIL CARE

1. Always roll mainsail from head down, Keep battens parallel. remove battens if sail won't be used "gain soon.
2 If boat isn't going to be sailed soon remove and roil jib or cover with U.V. sock.
3. Always dry your sails thoroughly and rinse free of salt.

This comprehensive tuning guide should get you started off on the right foot and at full speed. Please feel free to call us with any questions you may have on tuning input.

Spreader Assembly

Spreaders point towards- rear of boat.

1. File slot in mast to suit spreader bar and packer.

2. Fit spreaders on bar.

3. File root of spreaders if necessary so that pin holes line up with holes on bar.

4 Ream pin holes 3/8".

5. Remove spreaders and attach cables (uppers).

6, Feed cable through end of hole in cable up to fixed nipple.

7. Attach loose nipple and crimp in place.

8. Attach and crimp Ronstan Turnbuck on end of cable.

9, Insert T-Tang into slot on mast.

10. Attach spreads to bar.

11 Insert 4 pins (2 per spreader) and attach cir-clips to secure in place.

N.B. We advise that this task is undertaken by an experienced 'Rigging Company'.

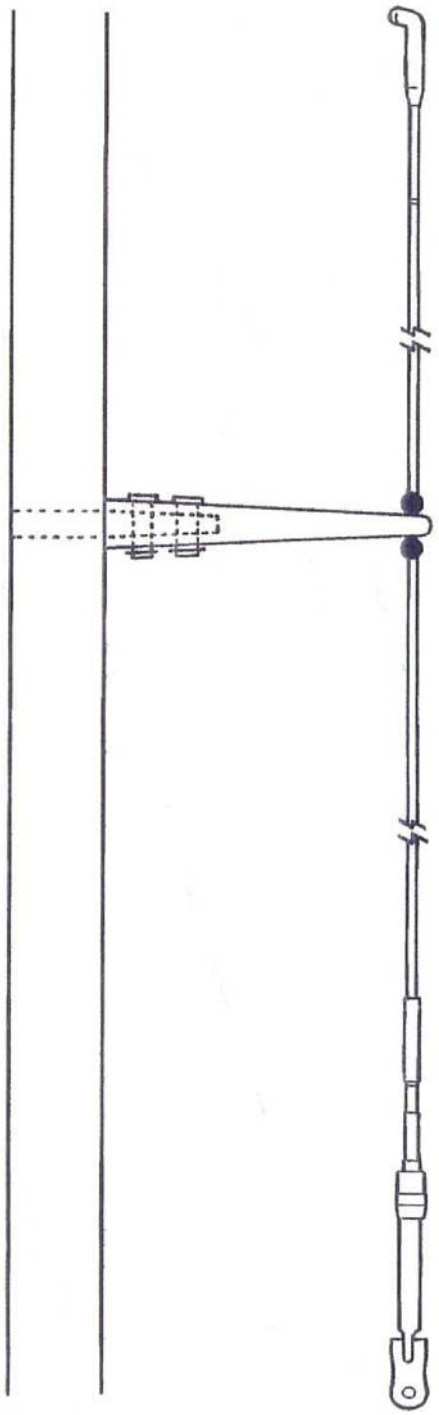

Internal Rigging of Boom Main Outhaul

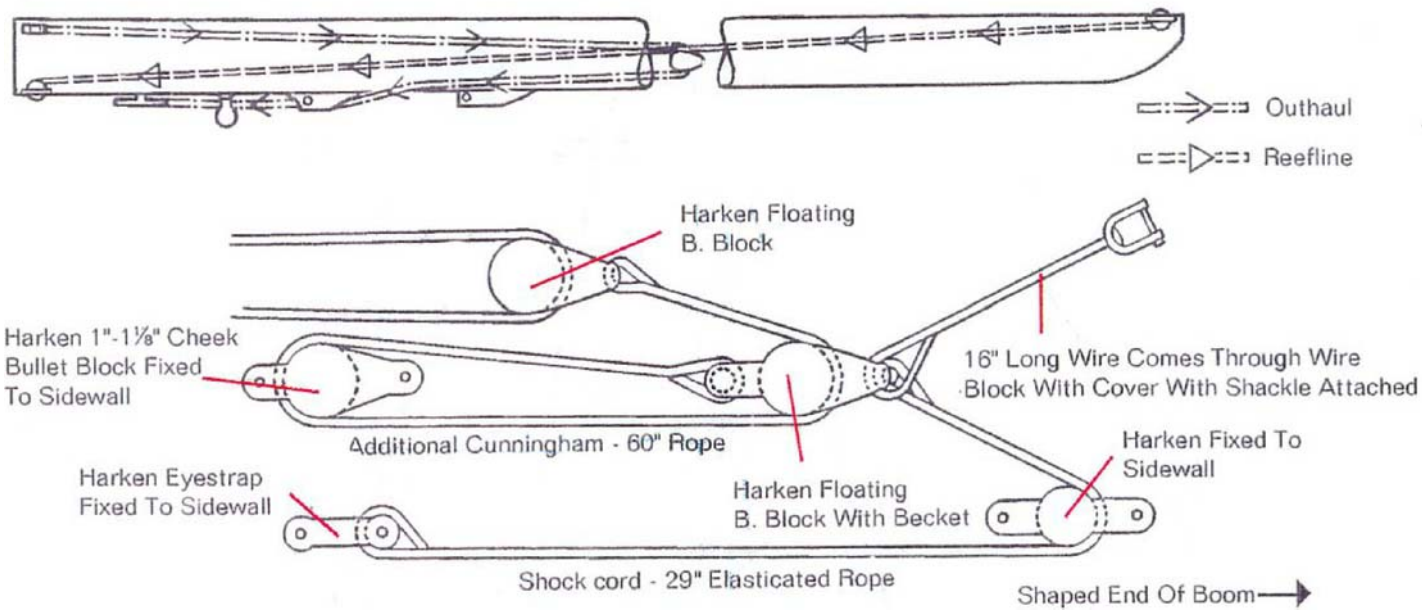

Ropes

1. REEF LINE - 32' black with yellow fleck 6mm rope-ties at Pulley without cover at shaped end of Boom through to Pulley at opposite end of Boom and wrapped around Boom end.

2. SHOCK CORD - 29" red elasticated 6mm rope – attached to fixed eyestrap inside boom through Bullet Block fixed to sidewall and attaches to floating Bullet Block, see sample.

3. ADDITIONAL CUNNINGHAM- 5' red. blue and yellow fleck 6mm rope - attaches to becket on floating Bullet Block through Cheek Bullet Block fixed on side wait back through floating Bullet Block and attaches to floating bullet block. see sample.

4. OUTHAUL - 20' white. blue and yellow fleck 6mm rope - attaches to fixed eyestrap on inside wall at square end of Boom. back through floating Bullet Block, out through hole in Boom, through sea dog Cam Cleat, Bullet Block at wrapped around Schaefer.

Appendix 1: Devoti Sailing - Melges 24 Parts List – Used on your boat

Devoti Part Number	Manufacturer	Manufacturers Part Number	Description	Quantity Used	Where used